VKPI 4E 600x350

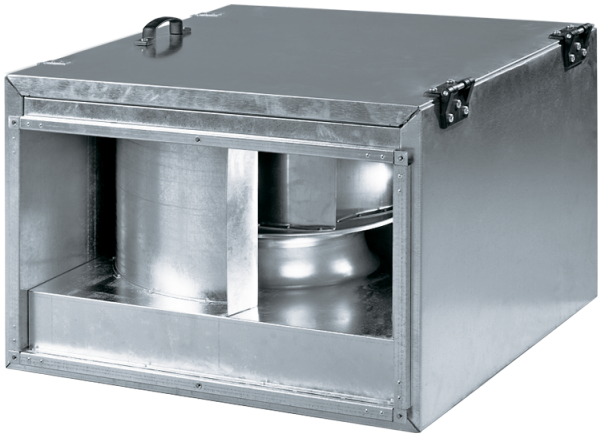

Centrifugal inline fans with backward curved blades in sound-insulated casing

- Sound pressure level LpA at 3 m: 47
- Sound-insulated casing
- Impeller type: Centrifugal impeller with backward curved blades
- Casing material: Galvanized steel
- Installation in any position

	Unit of measurement	VKPI 4E 600x350
Connected air duct size	mm	600x350
Phases	-	1
Maximum supply voltage	V	240
Minimum supply voltage	V	220
Power supply frequency	Hz	50/60
Rated power	W	470
Unit current	A	2.37
Maximum airflow	m^3/h	2950
Rotation speed at 50hz	-	1370
Sound pressure level LpA at 3 m	dB(A)	47
Weight	kg	56.2
Transported air temperature (max)	°C	80
Transported air temperature (min)	°C	-30
Ingress protection rating	-	IPX4
Ingress protection rating of the drive	-	IP44
Impeller material	-	Aluminium

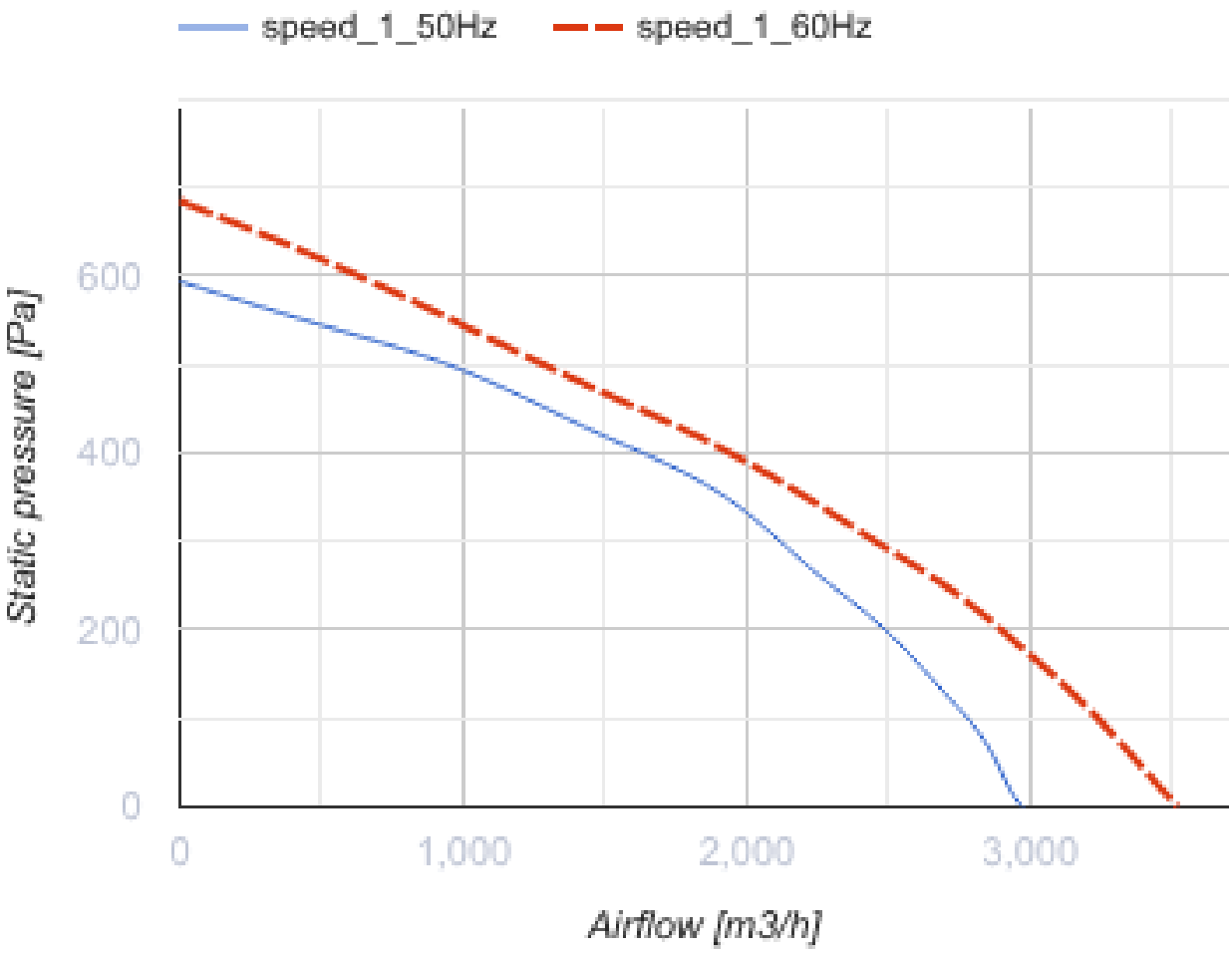
speed_1_50Hz
speed_1_60Hz
Static pressure [Pa]
600
400
200
0
0
1,000
2,000
3,000
Airflow [m3/h]

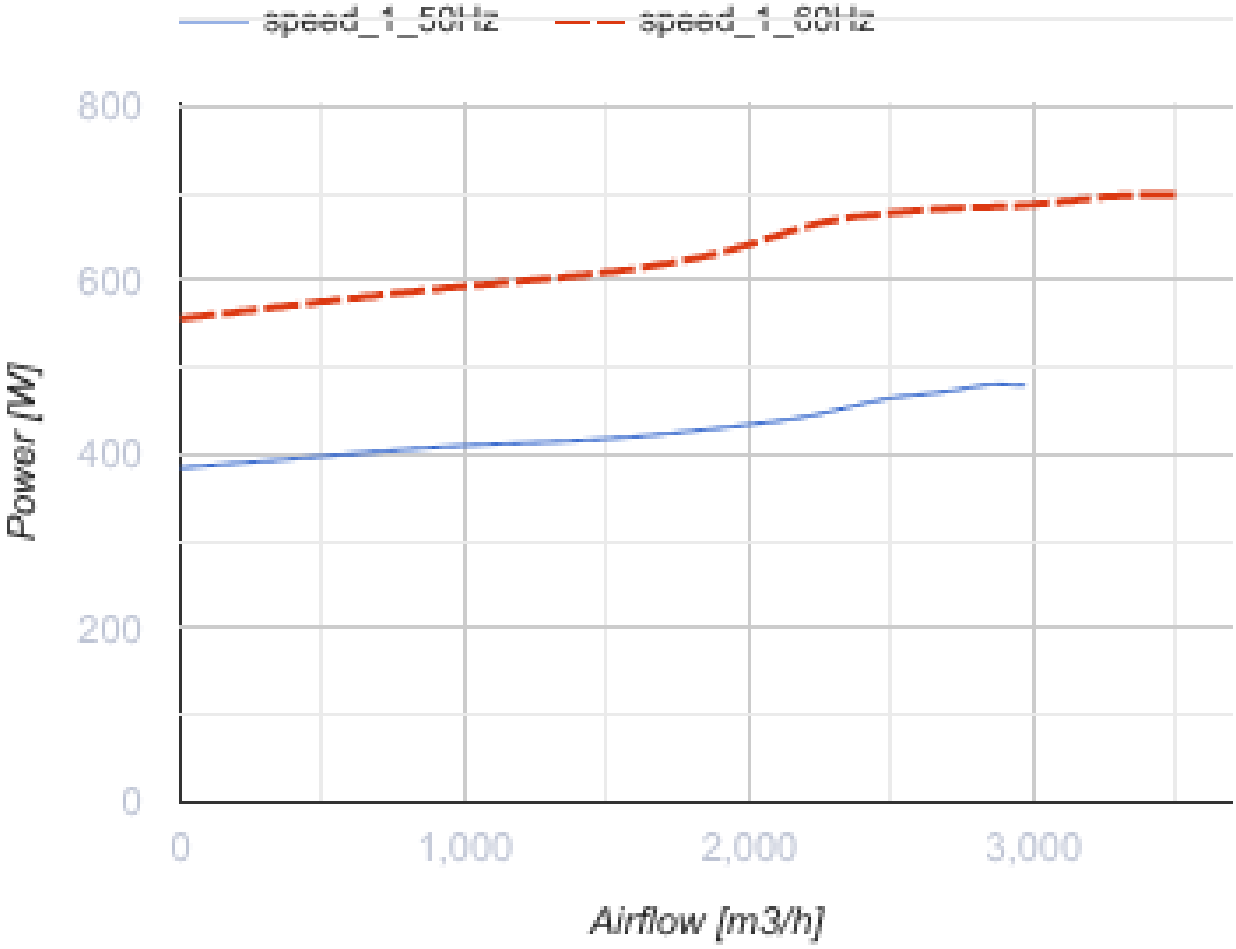

Dimensions

B	B1	B2	B3	H	H1	H2	H3	L
600	620	640	700	350	370	390	530	735

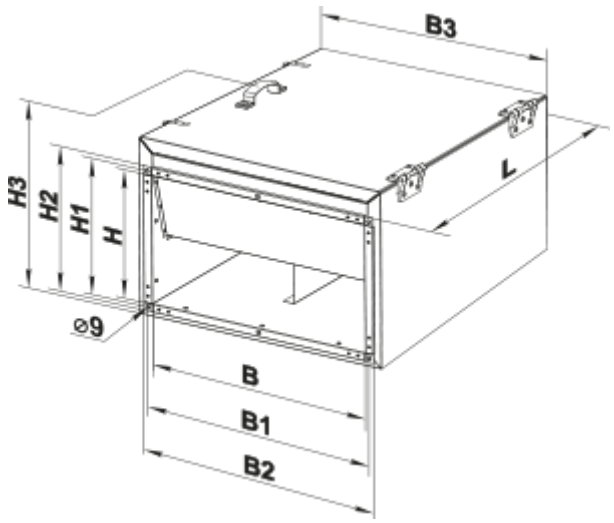

Accessories

For rectangular ducts

Name	Photo	Description
SR 600x350	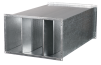	Plate silencer for installation in rectangular ducts

For rectangular ducts

Name	Photo	Description
FB 600x350		Rectangular panel air filters
FBK 600x350-4		Rectangular bag air filters
FBK 600x350-5		Rectangular bag air filters
FBK 600x350-7		Rectangular bag air filters

For rectangular ducts

Name	Photo	Description
KOM1 600x350		Backdraught gravity dampe for shutting off air flow in rectangular air ducts
KR 600x350		Air dampers for controlling air flow in rectangular air ducts

For rectangular ducts

Name	Photo	Description
VVG 600x350		Flexible anti-vibration inserts for round air ducts

Water heaters

Name	Photo	Description

NKV 600x350-4		Inline water supply air heaters or heater for air handling units with a rectangular cross-section

Electrical heaters

Name	Photo	Description
NK 600x350-21,0-3		Rectangular electric inline heaters
NK 600x350-24,0-3		Rectangular electric inline heaters

Airflow regulators

Name	Photo	Description
RRV 600x350		Air flow controllers

Water coolers

Name	Photo	Description
OKW 600x350-3		Rectangular inline water coolers

Freon coolers

Name	Photo	Description
OKF 600x350-3		Rectangular inline direct evaporative coolers

Ecodesign

Trademark	Vents
Model	VKPI 4E 600x350
Type of drive installed	External MSD or VSD
Type of heat recovery system	None
Nominal external pressure (Pa)	335
Maximum external leakage rates (%)	2.7
Static efficiency (%)	43.7
Effective electric power input (kW)	0.43
Sound power level (dB(A))	79
Declared typology	NRVU UVU