VKPI 4D 600x300

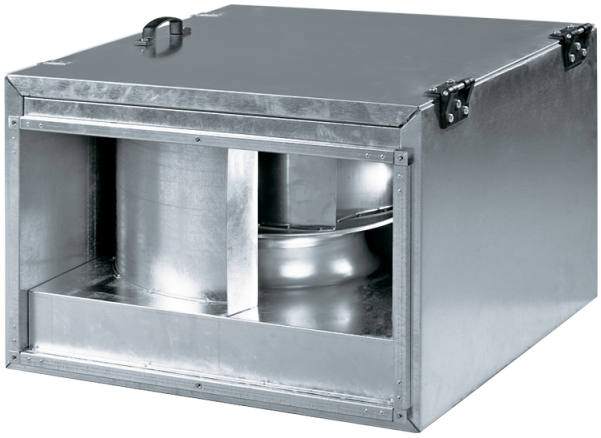

Centrifugal inline fans with backward curved blades in sound-insulated casing

• Sound pressure level LpA at 3 m: 45
• Sound-insulated casing
• Impeller type: Centrifugal impeller with backward curved blades
• Casing material: Galvanized steel
• Installation in any position

	Unit of measurement	VKPI 4D 600x300
Connected air duct size	mm	600x300
Phases	-	3
Minimum supply voltage	V	400
Maximum supply voltage	V	400
Power supply frequency	Hz	50/60
Rated power	W	230
Unit current	A	0.52
Maximum airflow	m³/h	2530
Rotation speed at 50hz	-	1360
Sound pressure level LpA at 3 m	dB(A)	45
Weight	kg	43.5
Transported air temperature (max)	°C	70
Transported air temperature (min)	°C	-25
Ingress protection rating	-	IPX4
Ingress protection rating of the drive	-	IP44
Impeller material	-	Aluminium

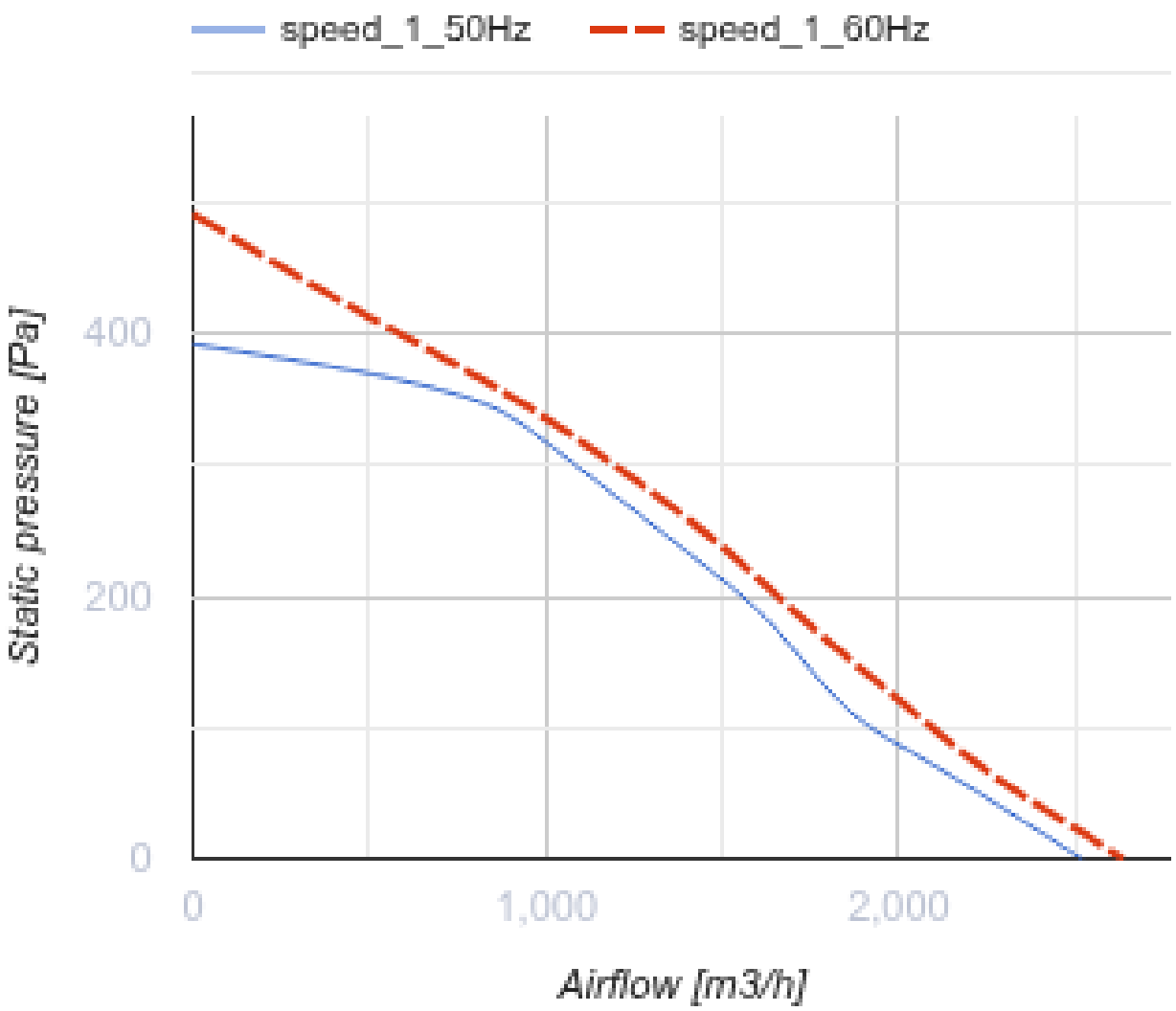
speed_1_50Hz
speed_1_60Hz
Static pressure [Pa]
400
200
0
0
1,000
2,000
Airflow [m3/h]

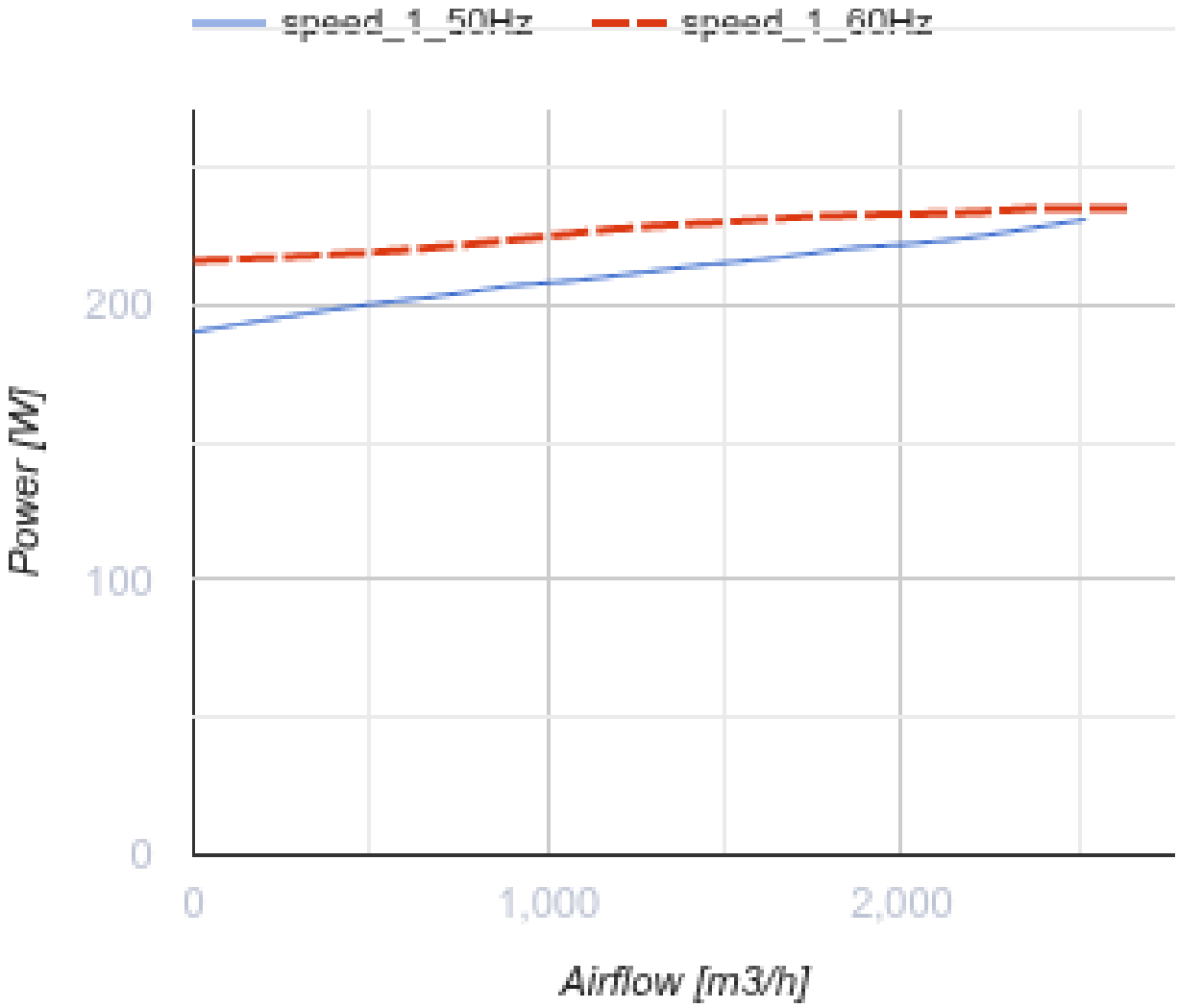

Dimensions

B	B1	B2	B3	H	H1	H2	H3	L
600	620	640	700	300	320	340	460	680

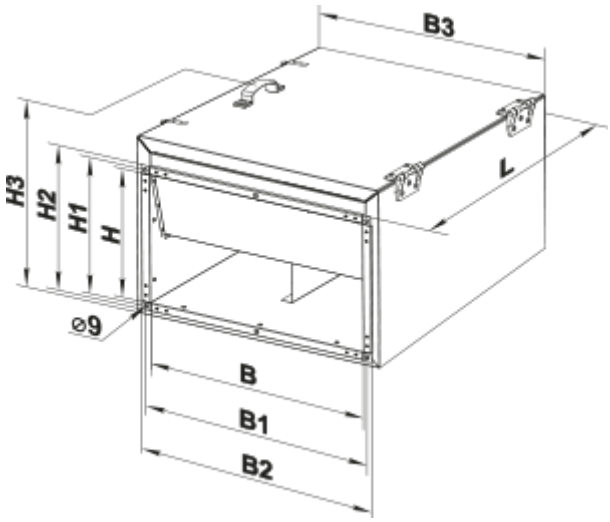

Accessories

For rectangular ducts

Name	Photo	Description
SR 600x300		Plate silencer for installation in rectangular ducts

For rectangular ducts

Name	Photo	Description
FB 600x300		Rectangular panel air filters
FBK 600x300-4		Rectangular bag air filters
FBK 600x300-5		Rectangular bag air filters
FBK 600x300-7		Rectangular bag air filters

For rectangular ducts

Name	Photo	Description
KOM1 600x300		Backdraught gravity dampe for shutting off air flow in rectangular air ducts

KR 600x300		Air dampers for controlling air flow in rectangular air ducts

For rectangular ducts

Name	Photo	Description
VVG 600x300		Flexible anti-vibration inserts for round air ducts

Water heaters

Name	Photo	Description
NKV 600x300-2		Inline water supply air heaters or heater for air handling units with a rectangular cross-section

Electrical heaters

Name	Photo	Description
NK 600x300-9,0-3		Rectangular electric inline heaters
NK 600x300-12,0-3		Rectangular electric inline heaters
NK 600x300-15,0-3		Rectangular electric inline heaters

Airflow regulators

Name	Photo	Description
RRV 600x300		Air flow controllers

Water coolers

Name	Photo	Description
OKW 600x300-3		Rectangular inline water coolers

Freon coolers

Name	Photo	Description

OKF 600x300-3		Rectangular inline direct evaporative coolers

Ecodesign

Trademark	Vents
Model	VKPI 4D 600x300
Type of drive installed	External MSD or VSD
Type of heat recovery system	None
Nominal external pressure (Pa)	297
Maximum external leakage rates (%)	2.7
Static efficiency (%)	44.1
Declared typology	NRVU UVU
Effective electric power input (kW)	0.209
Sound power level (dB(A))	66