VKPI 400x200 L1 EC



Centrifugal inline fans with backward curved blades in sound-insulated casing with EC-motors

- Sound pressure level LpA at 3 m: 30
- Sound-insulated casing
- Impeller type: Centrifugal impeller with backward curved blades
- Casing material: Galvanized steel
- Installation in any position

	Unit of measurement	VKPI 400x200 L1 EC
Connected air duct size	mm	400x200
Phases	-	1
Minimum supply voltage	V	230
Maximum supply voltage	V	230
Power supply frequency	Hz	50/60
Rated power	W	192
Unit current	A	1.43
Maximum airflow	m³/h	1190
Rotation speed at 50hz	-	3010
Sound pressure level LpA at 3 m	dB(A)	30
Weight	kg	16.8
Transported air temperature (max)	°C	50
Transported air temperature (min)	°C	-25
Ingress protection rating	-	IPX4
Ingress protection rating of the drive	-	IP54
Impeller material	-	Plastic

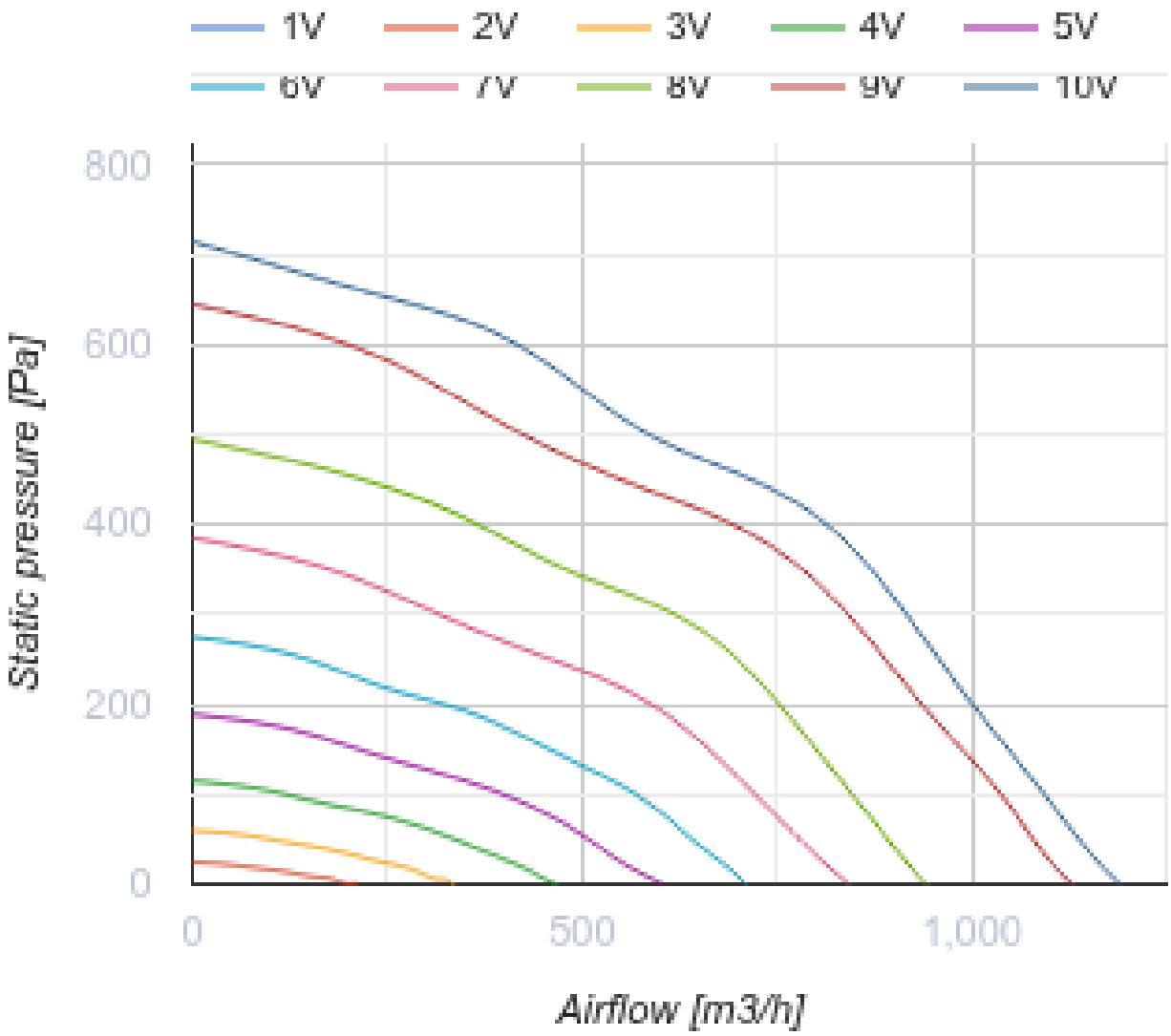
1V
2V
3V
4V
5V
6V
7V
8V
9V
10V
800
600
400
200
0
Static pressure [Pa]
0
500
1,000
Airflow [m3/h]

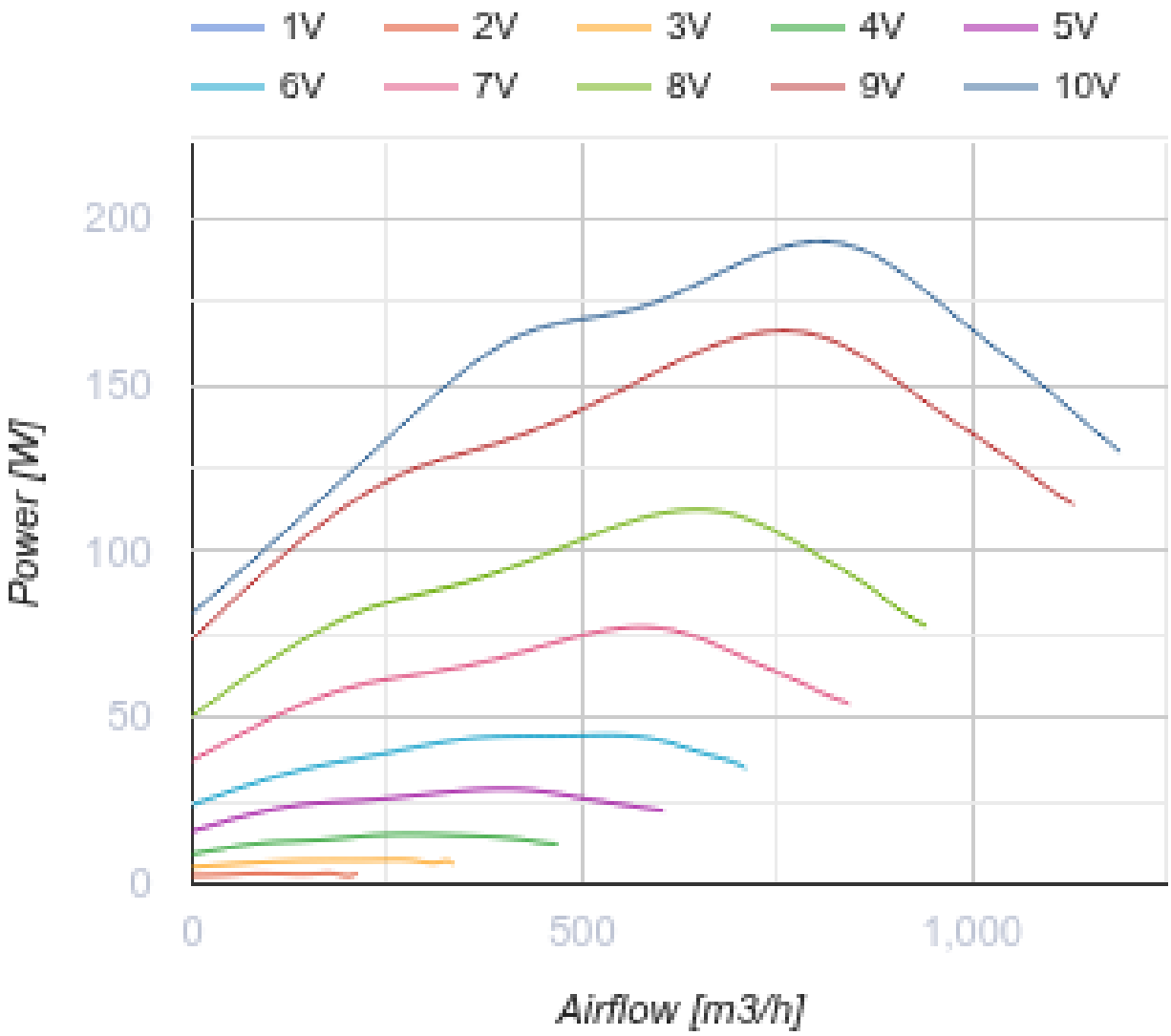

Dimensions

B	B1	B3	H	H1	H3	L
400	420	464	200	220	322	460

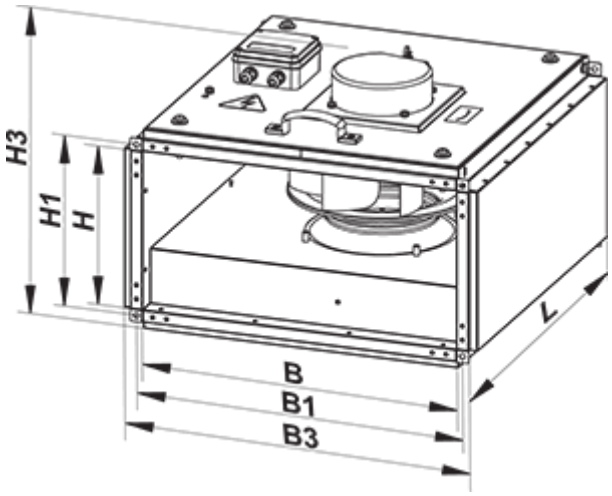

Accessories

For rectangular ducts

Name	Photo	Description
SR 400x200		Plate silencer for installation in rectangular ducts

For rectangular ducts

Name	Photo	Description
FB 400x200		Rectangular panel air filters
FBK 400x200-4		Rectangular bag air filters
FBK 400x200-5		Rectangular bag air filters
FBK 400x200-7		Rectangular bag air filters

For rectangular ducts

Name	Photo	Description
KOM1 400x200		Backdraught gravity dampe for shutting off air flow in rectangular air ducts
KR 400x200		Air dampers for controlling air flow in rectangular air ducts

For rectangular ducts

Name	Photo	Description
VVG 400x200		Flexible anti-vibration inserts for round air ducts

Water heaters

Name	Photo	Description
NKV 400x200-2		Inline water supply air heaters or heater for air handling units with a rectangular cross-section
NKV 400x200-4		Inline water supply air heaters or heater for air handling units with a rectangular cross-section

Electrical heaters

Name	Photo	Description
NK 400x200-4,5-3		Rectangular electric inline heaters
NK 400x200-6,0-3		Rectangular electric inline heaters
NK 400x200-7,5-3		Rectangular electric inline heaters
NK 400x200-9,0-3		Rectangular electric inline heaters
NK 400x200-10,5-3		Rectangular electric inline heaters
NK 400x200-12,0-3		Rectangular electric inline heaters
NK 400x200-15,0-3		Rectangular electric inline heaters

Water coolers

Name	Photo	Description
OKW 400x200-3		Rectangular inline water coolers

Airflow regulators

Name	Photo	Description
RRV 400x200		Air flow controllers

Freon coolers

Name	Photo	Description
OKF 400x200-3		Rectangular inline direct evaporative coolers

Ecodesign

Trademark	Vents
Model	VKPI 400x200 L1 EC
Type of drive installed	Integrated VSD
Type of heat recovery system	None
Nominal external pressure (Pa)	504
Maximum external leakage rates (%)	2.7
Static efficiency (%)	54.2
Declared typology	NRVU UVU
Effective electric power input (kW)	0.174
Sound power level (dB(A))	50