VKPI 2E 500x250

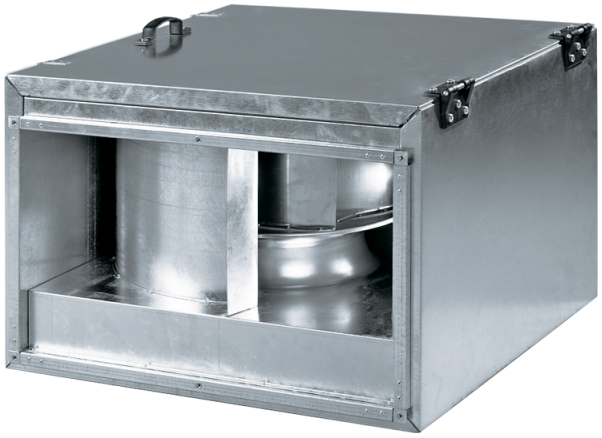

Centrifugal inline fans with backward curved blades in sound-insulated casing

- Sound pressure level LpA at 3 m: 51
- Sound-insulated casing
- Impeller type: Centrifugal impeller with backward curved blades
- Casing material: Galvanized steel
- Installation in any position

	Unit of measurement	VKPI 2E 500x250
Connected air duct size	mm	500x250
Phases	-	1
Minimum supply voltage	V	220
Maximum supply voltage	V	240
Power supply frequency	Hz	50/60
Rated power	W	305
Unit current	A	1.32
Maximum airflow	m^3/h	1720
Rotation speed at 50hz	-	2550
Sound pressure level LpA at 3 m	dB(A)	51
Weight	kg	27.6
Transported air temperature (max)	°C	45
Transported air temperature (min)	°C	-25
Ingress protection rating	-	IPX4
Ingress protection rating of the drive	-	IP44
Impeller material	-	Galvanized steel

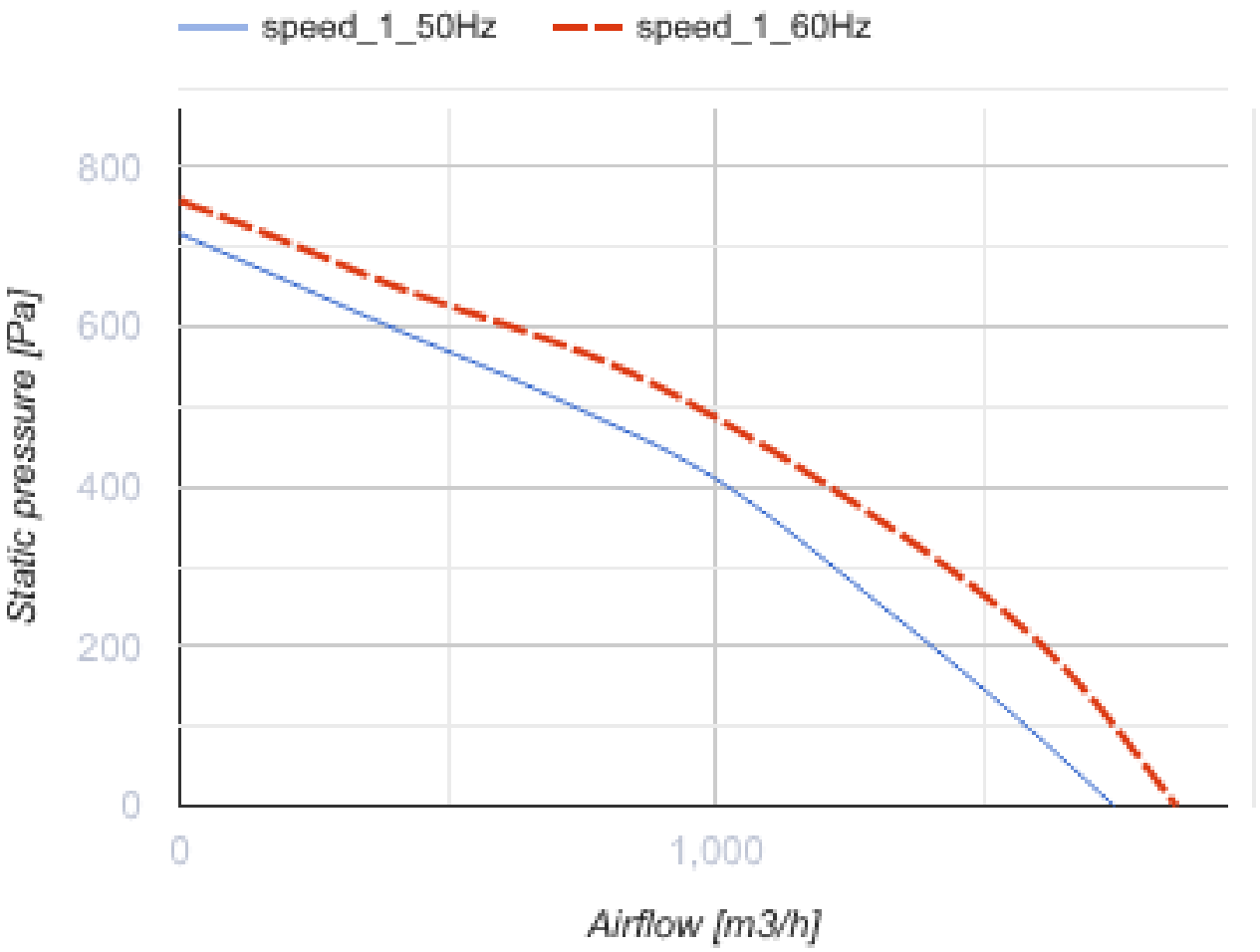
speed_1_50Hz
speed_1_60Hz
800
600
400
200
0
Static pressure [Pa]
0
1,000
Airflow [m3/h]

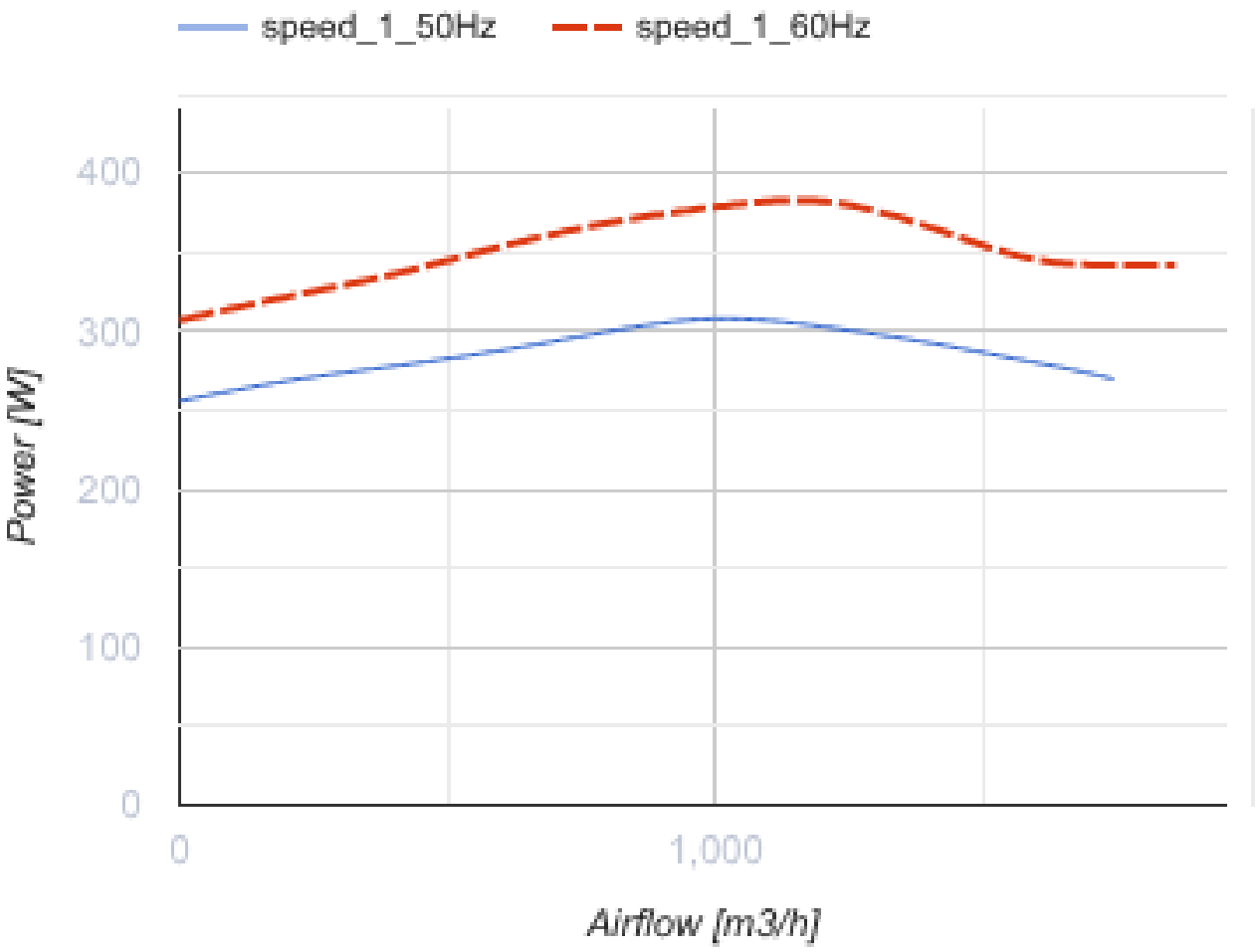

Dimensions

B	B1	B2	B3	H	H1	H2	H3	L
500	520	540	600	250	270	290	410	640

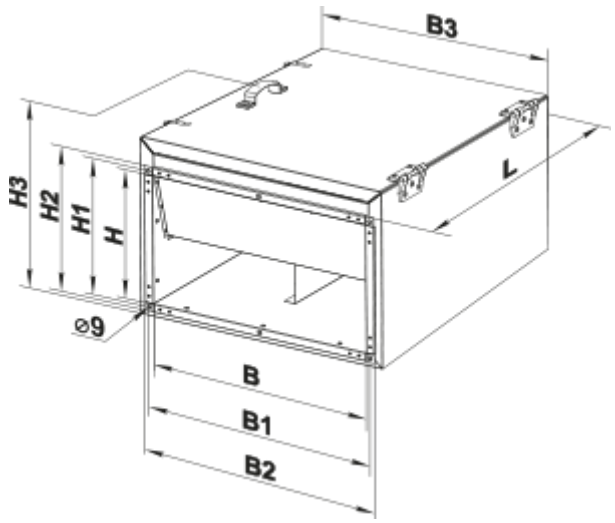

Accessories

For rectangular ducts

Name	Photo	Description
SR 500x250	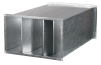	Plate silencer for installation in rectangular ducts

For rectangular ducts

Name	Photo	Description
FB 500x250		Rectangular panel air filters
FBK 500x250-4		Rectangular bag air filters
FBK 500x250-5		Rectangular bag air filters
FBK 500x250-7		Rectangular bag air filters

For rectangular ducts

Name	Photo	Description
KOM1 500x250		Backdraught gravity dampe for shutting off air flow in rectangular air ducts
KR 500x250		Air dampers for controlling air flow in rectangular air ducts

For rectangular ducts

Name	Photo	Description
VVG 500x250		Flexible anti-vibration inserts for round air ducts

Water heaters

Name	Photo	Description
NKV 500x250-2		Inline water supply air heaters or heater for air handling units with a rectangular cross-section

NKV 500x250-4		Inline water supply air heaters or heater for air handling units with a rectangular cross-section

Electrical heaters

Name	Photo	Description
NK 500x250-6,0-3		Rectangular electric inline heaters
NK 500x250-7,5-3		Rectangular electric inline heaters
NK 500x250-9,0-3		Rectangular electric inline heaters
NK 500x250-10,5-3		Rectangular electric inline heaters
NK 500x250-12,0-3		Rectangular electric inline heaters
NK 500x250-15,0-3		Rectangular electric inline heaters
NK 500x250-18,0-3		Rectangular electric inline heaters
NK 500x250-21,0-3		Rectangular electric inline heaters

Airflow regulators

Name	Photo	Description
RRV 500x250		Air flow controllers

Water coolers

Name	Photo	Description
OKW 500x250-3		Rectangular inline water coolers

Freon coolers

Name	Photo	Description

OKF 500x250-3		Rectangular inline direct evaporative coolers

Ecodesign

Trademark	Vents
Model	VKPI 2E 500x250
Type of drive installed	External MSD or VSD
Type of heat recovery system	None
Nominal external pressure (Pa)	400
Maximum external leakage rates (%)	2.7
Static efficiency (%)	40.5
Declared typology	NRVU UVU
Effective electric power input (kW)	0.279
Sound power level (dB(A))	73