VKPI 1000x500 L3 EC

Centrifugal inline fans with backward curved blades in sound-insulated casing with EC-motors



- Sound pressure level LpA at 3 m: 47
- Sound-insulated casing
- Impeller type: Centrifugal impeller with backward curved blades
- Casing material: Galvanized steel
- Installation in any position

	Unit of measurement	VKPI 1000x500 L3 EC
Connected air duct size	mm	1000x500
Phases	-	3
Maximum supply voltage	V	400
Minimum supply voltage	V	400
Power supply frequency	Hz	50/60
Rated power	W	3429
Unit current	A	5
Maximum airflow	m^3/h	11190
Rotation speed at 50hz	-	1800
Sound pressure level LpA at 3 m	dB(A)	47
Weight	kg	130
Transported air temperature (max)	°C	50
Transported air temperature (min)	°C	-25
Ingress protection rating	-	IPX4
Ingress protection rating of the drive	-	IP54
Impeller material	-	Aluminium

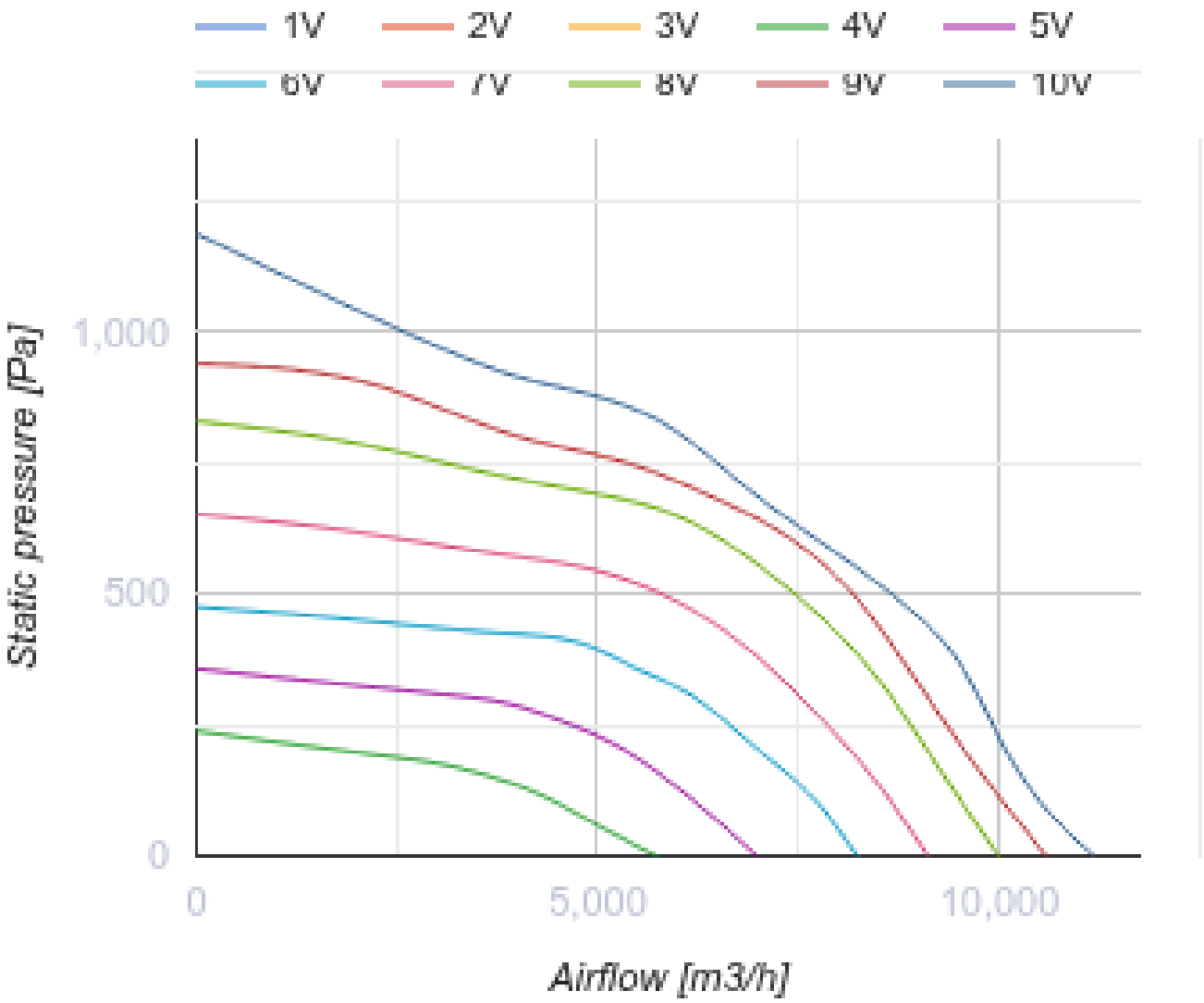
1V
2V
3V
4V
5V
6V
7V
8V
9V
10V
Static pressure [Pa]
1,000
500
0
0
5,000
10,000
Airflow [m3/h]

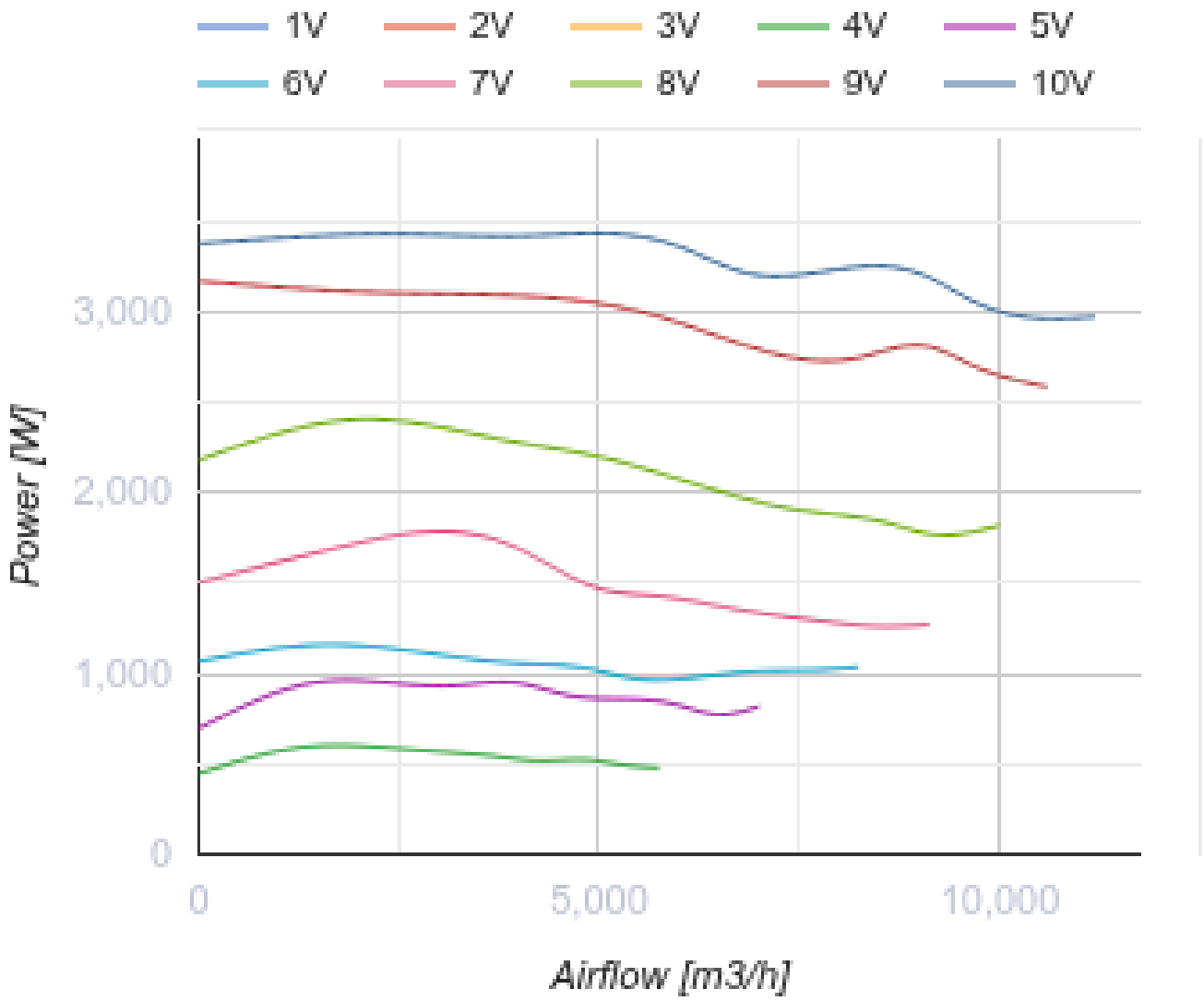

Dimensions

B	B1	B3	H	H1	H3	L	F	K
1000	1020	1183	500	520	814	1052	1155	850

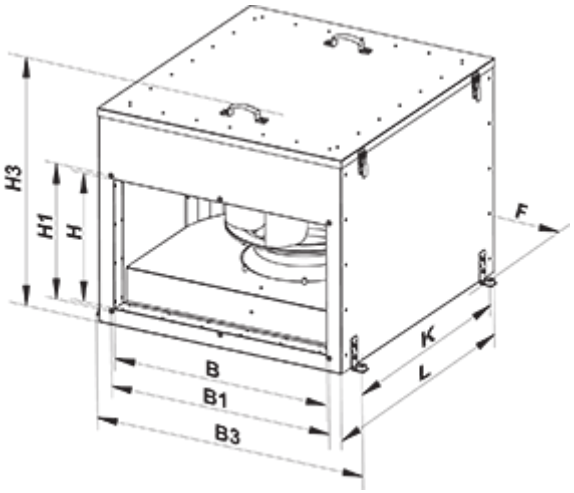

Accessories

For rectangular ducts

Name	Photo	Description
SR 1000x500		Plate silencer for installation in rectangular ducts

For rectangular ducts

Name	Photo	Description
FB 1000x500		Rectangular panel air filters
FBK 1000x500-4		Rectangular bag air filters
FBK 1000x500-5		Rectangular bag air filters
FBK 1000x500-7		Rectangular bag air filters

For rectangular ducts

Name	Photo	Description
VVG 1000x500		Flexible anti-vibration inserts for round air ducts

Water heaters

Name	Photo	Description

NKV 1000x500-2		Inline water supply air heaters or heater for air handling units with a rectangular cross-section
NKV 1000x500-3		Inline water supply air heaters or heater for air handling units with a rectangular cross-section

Electrical heaters

Name	Photo	Description
NK 1000x500-45,0-3		Rectangular electric inline heaters
NK 1000x500-54,0-3		Rectangular electric inline heaters

Airflow regulators

Name	Photo	Description
RRV 1000x500		Air flow controllers

Water coolers

Name	Photo	Description
OKW 1000x500-3		Rectangular inline water coolers

Freon coolers

Name	Photo	Description
OKF 1000x500-3		Rectangular inline direct evaporative coolers

Ecodesign

Trademark	Vents
Model	VKPI 1000x500 L3 EC
Type of drive installed	Integrated VSD
Type of heat recovery system	None
Nominal external pressure (Pa)	362
Maximum external leakage rates (%)	2.7
Static efficiency (%)	62.3
Declared typology	NRVU UVU
Effective electric power input (kW)	0.974
Sound power level (dB(A))	67