# VKPFI 4D 600x300



Centrifugal inline fans with forward curved blades in sound-insulated casings

- Sound pressure level LpA at 3 m: 50
- Sound-insulated casing
- Impeller type: Centrifugal impeller with forward curved blades
- Casing material: Galvanized steel
- Installation in any position

| | Unit of measurement | VKPFI 4D 600x300 |
|---|---|---|
| Connected air duct size | mm | 600x300 |
| Phases | - | 3 |
| Maximum supply voltage | V | 400 |
| Minimum supply voltage | V | 400 |
| Power supply frequency | Hz | 50 |
| Rated power | W | 1560 |
| Unit current | A | 2.73 |
| Maximum airflow | $m^3/h$ | 3740 |
| Rotation speed at 50hz | - | 1310 |
| Sound pressure level LpA at 3 m | dB(A) | 50 |
| Weight | kg | 56 |
| Transported air temperature (max) | °C | 65 |
| Transported air temperature (min) | °C | -25 |
| Ingress protection rating | - | IPX4 |
| Ingress protection rating of the drive | - | IP44 |
| Impeller material | - | Galvanized steel |

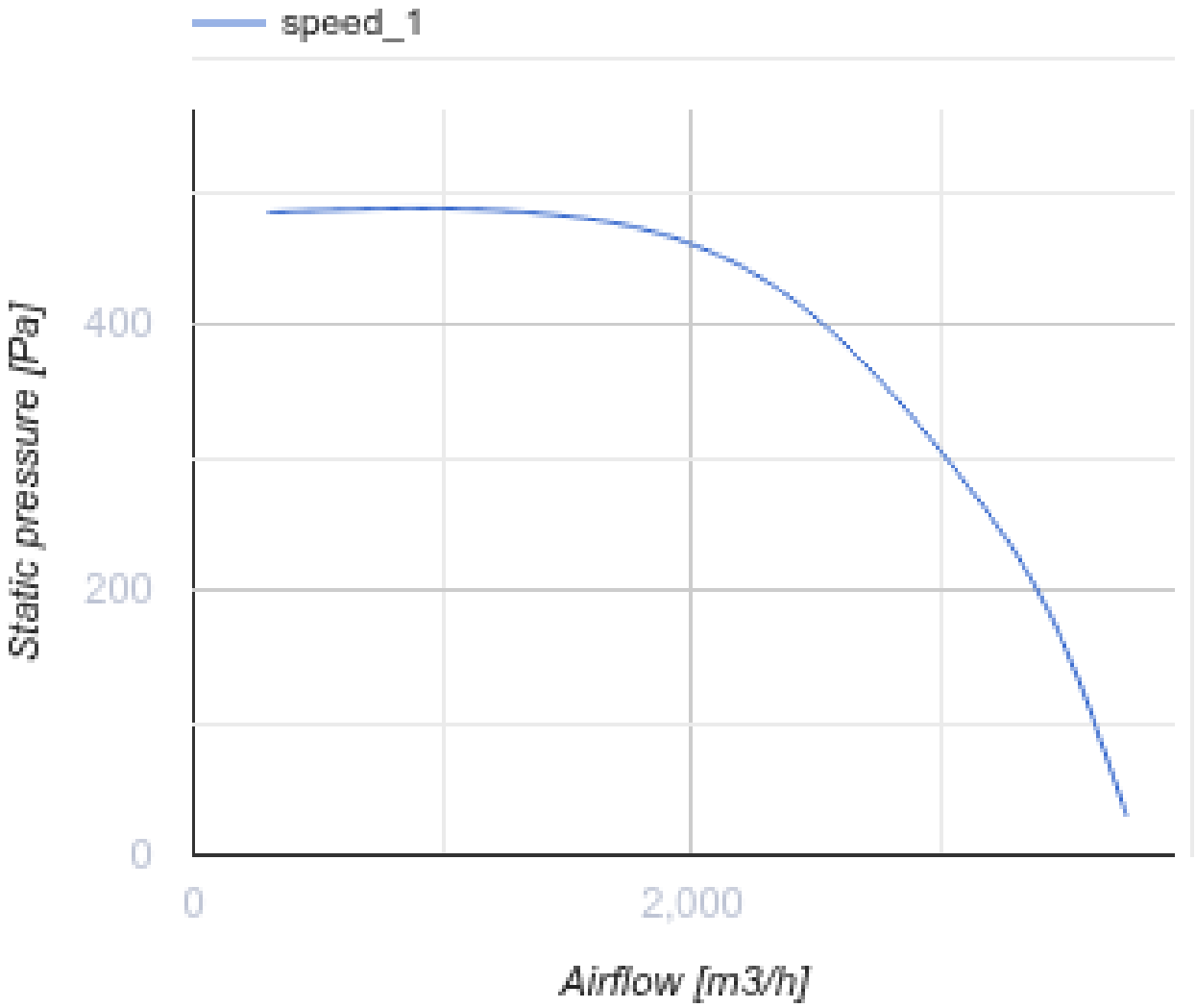
speed_1
Static pressure [Pa]
400
200
0
0
2,000
Airflow [m3/h]

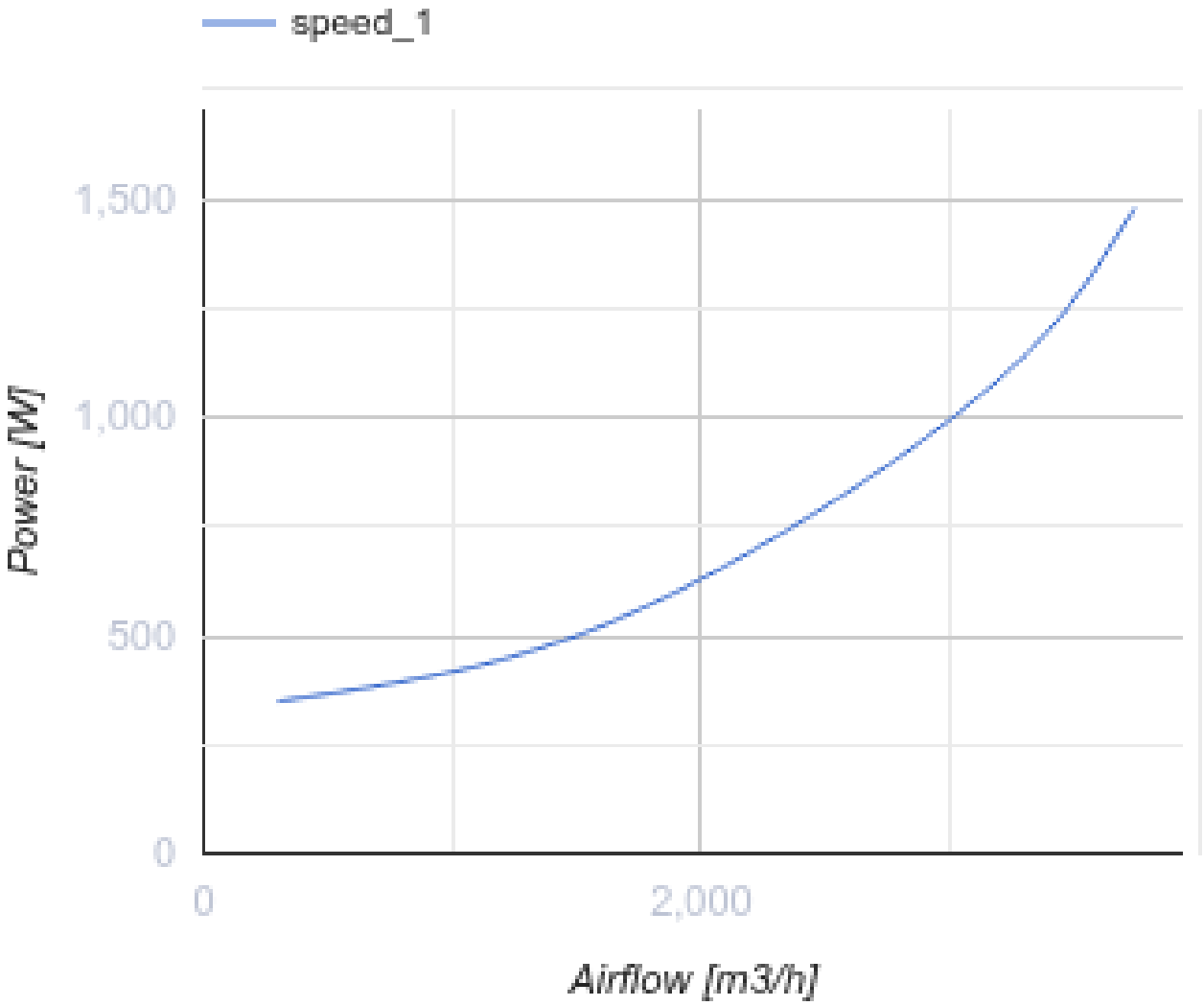


## Dimensions

| B | B1 | B2 | B3 | H | H1 | H2 | H3 | L |
|---|---|---|---|---|---|---|---|---|
| 600 | 620 | 640 | 670 | 300 | 320 | 340 | 480 | 680 |

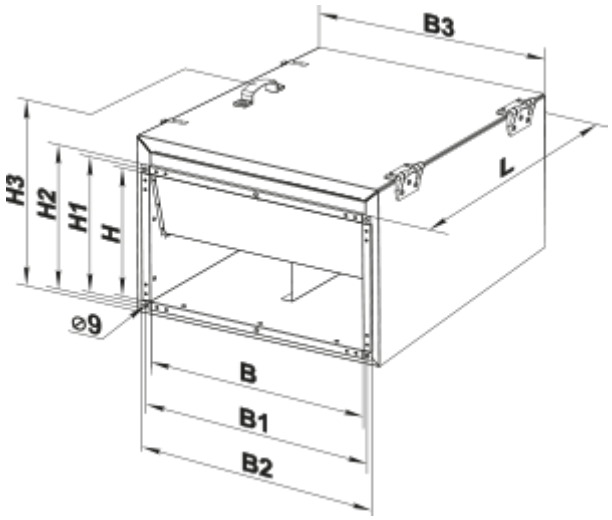


## Accessories

### For rectangular ducts

| Name | Photo | Description |
|---|---|---|
| SR 600x300 |  | Plate silencer for installation in rectangular ducts |

### For rectangular ducts

| Name | Photo | Description |
|---|---|---|
| FB 600x300 |  | Rectangular panel air filters |
| FBK 600x300-4 |  | Rectangular bag air filters |
| FBK 600x300-5 |  | Rectangular bag air filters |
| FBK 600x300-7 |  | Rectangular bag air filters |

### For rectangular ducts

| Name | Photo | Description |
|---|---|---|
| KOM1 600x300 |  | Backdraught gravity dampe for shutting off air flow in rectangular air ducts |
| KR 600x300 |  | Air dampers for controlling air flow in rectangular air ducts |

| | | |
|---|---|---|
| KG 600x300 |  | Gravity valve for automatic airflow shut-off in round air ducts |

### For rectangular ducts

| Name | Photo | Description |
|---|---|---|
| VVG 600x300 |  | Flexible anti-vibration inserts for round air ducts |

### For rectangular ducts

| Name | Photo | Description |
|---|---|---|
| PR 600x300 | 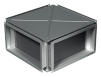 | Cross-flow plate heat exchangers for rectangular air ducts |

### Mixing chambers

| Name | Photo | Description |
|---|---|---|
| SKRA 600x300/24 |  | Mixing chambers for mixing (recirculating) part of the exhaust air with the outdoor air in the appropriate proportion |

### Water heaters

| Name | Photo | Description |
|---|---|---|
| NKV 600x300-2 |  | Inline water supply air heaters or heater for air handling units with a rectangular cross-section |
| NKV 600x300-4 |  | Inline water supply air heaters or heater for air handling units with a rectangular cross-section |

### Electrical heaters

| Name | Photo | Description |
|---|---|---|
| NK 600x300-9,0-3 |  | Rectangular electric inline heaters |
| NK 600x300-12,0-3 |  | Rectangular electric inline heaters |
| NK 600x300-15,0-3 |  | Rectangular electric inline heaters |

| | | |
|---|---|---|
| NK 600x300-18,0-3 |  | Rectangular electric inline heaters |
| NK 600x300-21,0-3 |  | Rectangular electric inline heaters |
| NK 600x300-24,0-3 |  | Rectangular electric inline heaters |
| NK 600x300-9,0-3 U |  | Rectangular electric inline heaters with control unit |
| NK 600x300-12,0-3 U |  | Rectangular electric inline heaters with control unit |
| NK 600x300-15,0-3 U |  | Rectangular electric inline heaters with control unit |
| NK 600x300-18,0-3 U |  | Rectangular electric inline heaters with control unit |
| NK 600x300-21,0-3 U |  | Rectangular electric inline heaters with control unit |
| NK 600x300-24,0-3 U |  | Rectangular electric inline heaters with control unit |

### Airflow regulators

| Name | Photo | Description |
|---|---|---|
| RRV 600x300 |  | Air flow controllers |

### Water coolers

| Name | Photo | Description |
|---|---|---|
| OKW 600x300-3 |  | Rectangular inline water coolers |

### Freon coolers

| Name | Photo | Description |
|---|---|---|

| | | |
|---|---|---|
| OKF 600x300-3 |  | Rectangular inline direct evaporative coolers |

### Speed controllers

| Name | Photo | Description |
|---|---|---|
| RSA5D-4,0-M |  | Three phase speed controller |

## Ecodesign

| Trademark | Vents |
|---|---|
| Model | VKPFI 4D 600x300 |
| Type of drive installed | External MSD or VSD |
| Type of heat recovery system | None |
| Nominal external pressure (Pa) | 485 |
| Maximum external leakage rates (%) | 2.7 |
| Static efficiency (%) | 40.6 |
| Sound power level (dB(A)) | 70 |
| Effective electric power input (kW) | 0.51 |
| Declared typology | NRVU UVU |