VKPF 4E 500x250



Centrifugal inline fans with forward curved blades

• Sound pressure level LpA at 3 m: 53
• Impeller type: Centrifugal impeller with forward curved blades
• Casing material: Galvanized steel
• Installation in any position

	Unit of measurement	VKPF 4E 500x250
Connected air duct size	mm	500x250
Phases	-	1
Minimum supply voltage	V	230
Maximum supply voltage	V	230
Power supply frequency	Hz	50
Rated power	W	535
Unit current	A	2.49
Maximum airflow	m^3/h	1750
Rotation speed at 50hz	-	1250
Sound pressure level LpA at 3 m	dB(A)	53
Weight	kg	24
Transported air temperature (max)	°C	40
Transported air temperature (min)	°C	-20
Ingress protection rating	-	IPX4
Ingress protection rating of the drive	-	IP44
Impeller material	-	Galvanized steel

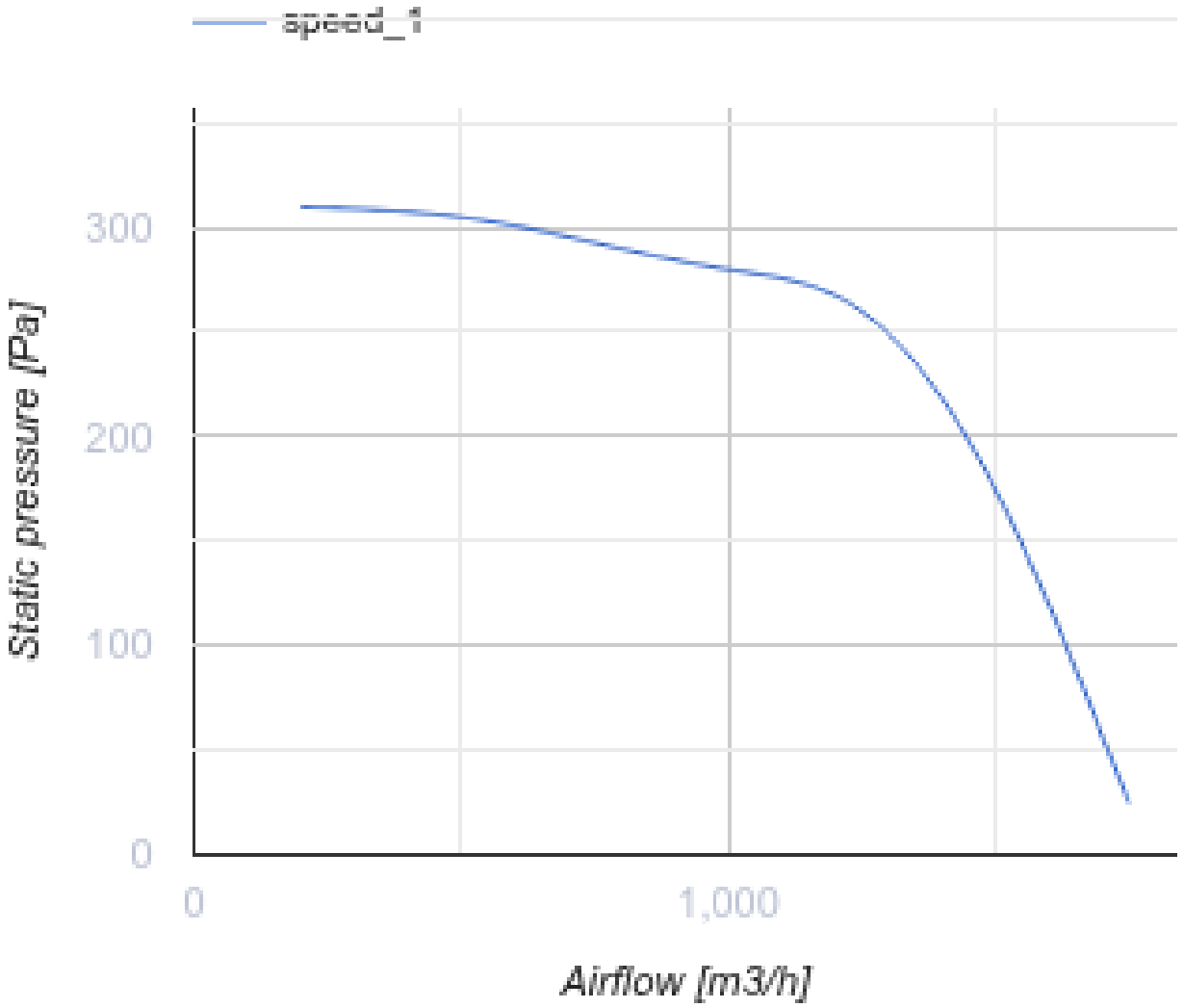
speed_1
300
200
100
0
0
1,000
Static pressure [Pa]
Airflow [m3/h]

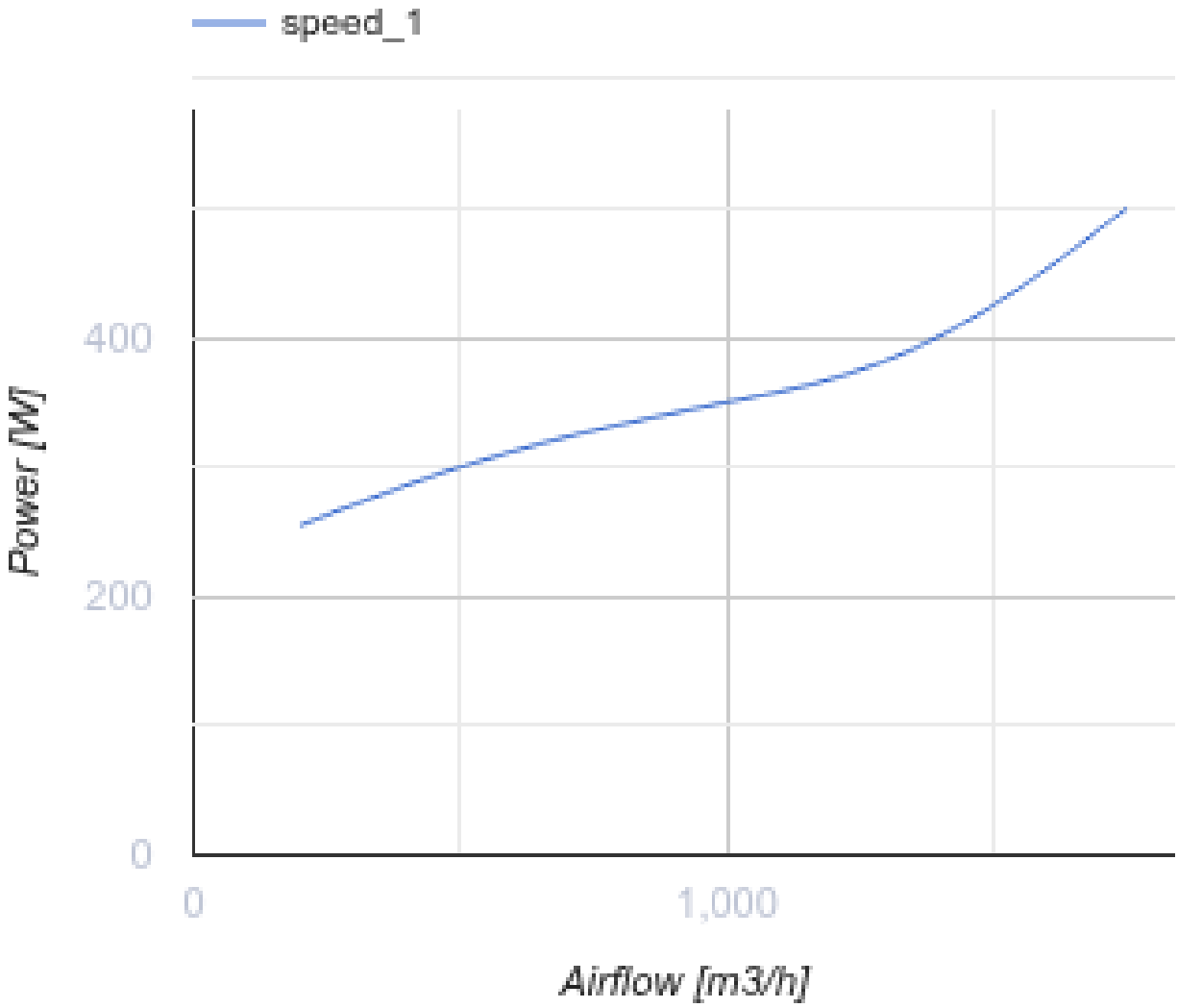

Dimensions

B	B1	B2	H	H1	H2	H3	L
500	520	540	250	270	290	335	640

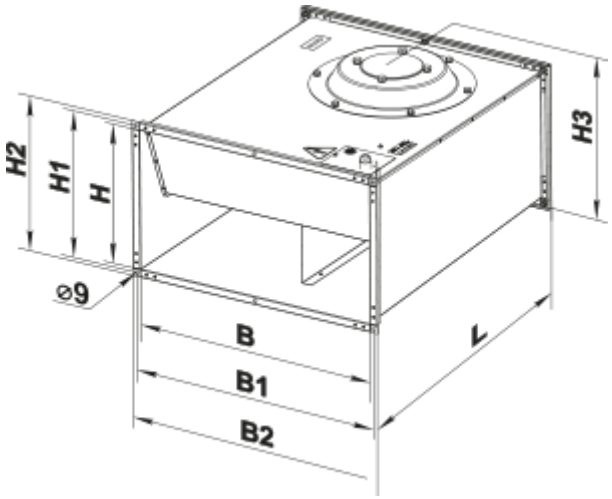

Accessories

For rectangular ducts

Name	Photo	Description
SR 500x250		Plate silencer for installation in rectangular ducts

For rectangular ducts

Name	Photo	Description
FB 500x250		Rectangular panel air filters
FBK 500x250-4		Rectangular bag air filters
FBK 500x250-5		Rectangular bag air filters
FBK 500x250-7		Rectangular bag air filters

For rectangular ducts

Name	Photo	Description
KOM1 500x250		Backdraught gravity dampe for shutting off air flow in rectangular air ducts
KR 500x250		Air dampers for controlling air flow in rectangular air ducts

KG 500x250		Gravity valve for automatic airflow shut-off in round air ducts

For rectangular ducts

Name	Photo	Description
VVG 500x250		Flexible anti-vibration inserts for round air ducts

For rectangular ducts

Name	Photo	Description
PR 500x250	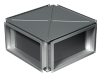	Cross-flow plate heat exchangers for rectangular air ducts

Mixing chambers

Name	Photo	Description
SKRA 500x250/24		Mixing chambers for mixing (recirculating) part of the exhaust air with the outdoor air in the appropriate proportion

Water heaters

Name	Photo	Description
NKV 500x250-2		Inline water supply air heaters or heater for air handling units with a rectangular cross-section
NKV 500x250-4		Inline water supply air heaters or heater for air handling units with a rectangular cross-section

Electrical heaters

Name	Photo	Description
NK 500x250-6,0-3		Rectangular electric inline heaters
NK 500x250-7,5-3		Rectangular electric inline heaters
NK 500x250-9,0-3		Rectangular electric inline heaters

NK 500x250-10,5-3		Rectangular electric inline heaters

Airflow regulators

Name	Photo	Description
RRV 500x250		Air flow controllers

Speed controllers

Name	Photo	Description
RSA5E-3,5-T		Speed controllers are applied for air flow control of single phase fans by means of motor step speed control

Water coolers

Name	Photo	Description
OKW 500x250-3		Rectangular inline water coolers

Freon coolers

Name	Photo	Description
OKF 500x250-3		Rectangular inline direct evaporative coolers

Ecodesign

Trademark	Vents
Model	VKPF 4E 500x250
Type of drive installed	External MSD or VSD
Type of heat recovery system	None
Nominal external pressure (Pa)	286
Maximum external leakage rates (%)	2.7
Static efficiency (%)	24.2
Declared typology	NRVU UVU
Effective electric power input (kW)	0.35
Sound power level (dB(A))	73