VKPF 4D 700x400



Centrifugal inline fans with forward curved blades

• Sound pressure level LpA at 3 m: 65
• Impeller type: Centrifugal impeller with forward curved blades
• Casing material: Galvanized steel
• Installation in any position

	Unit of measurement	VKPF 4D 700x400
Connected air duct size	mm	700x400
Phases	-	3
Minimum supply voltage	V	400
Maximum supply voltage	V	400
Power supply frequency	Hz	50
Rated power	W	3630
Unit current	A	6
Maximum airflow	m^3/h	6450
Rotation speed at 50hz	-	1320
Sound pressure level LpA at 3 m	dB(A)	65
Weight	kg	60
Transported air temperature (max)	°C	40
Transported air temperature (min)	°C	-25
Ingress protection rating	-	IPX4
Ingress protection rating of the drive	-	IP44
Impeller material	-	Galvanized steel

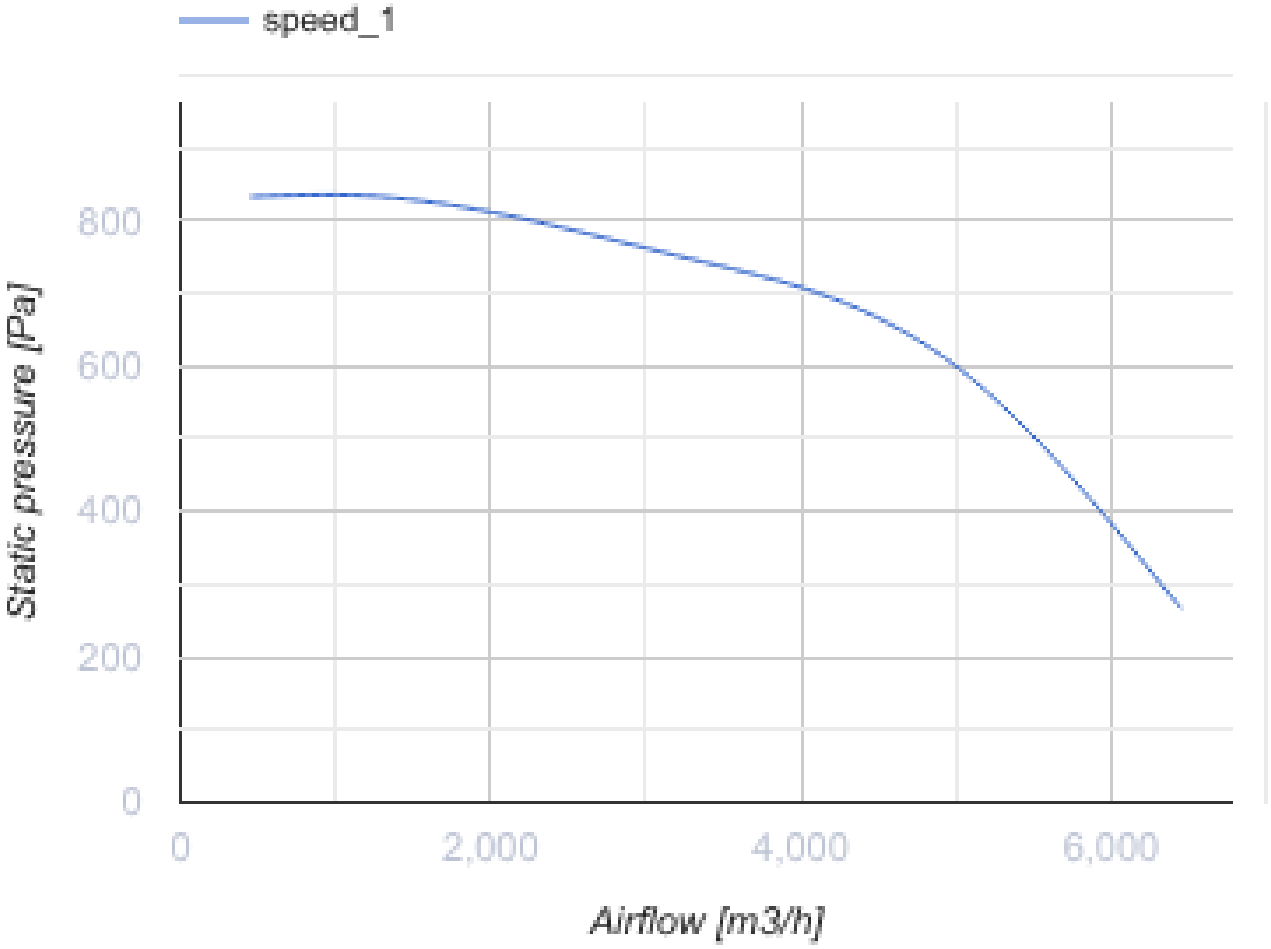
speed_1
Static pressure [Pa]
800
600
400
200
0
0
2,000
4,000
6,000
Airflow [m3/h]

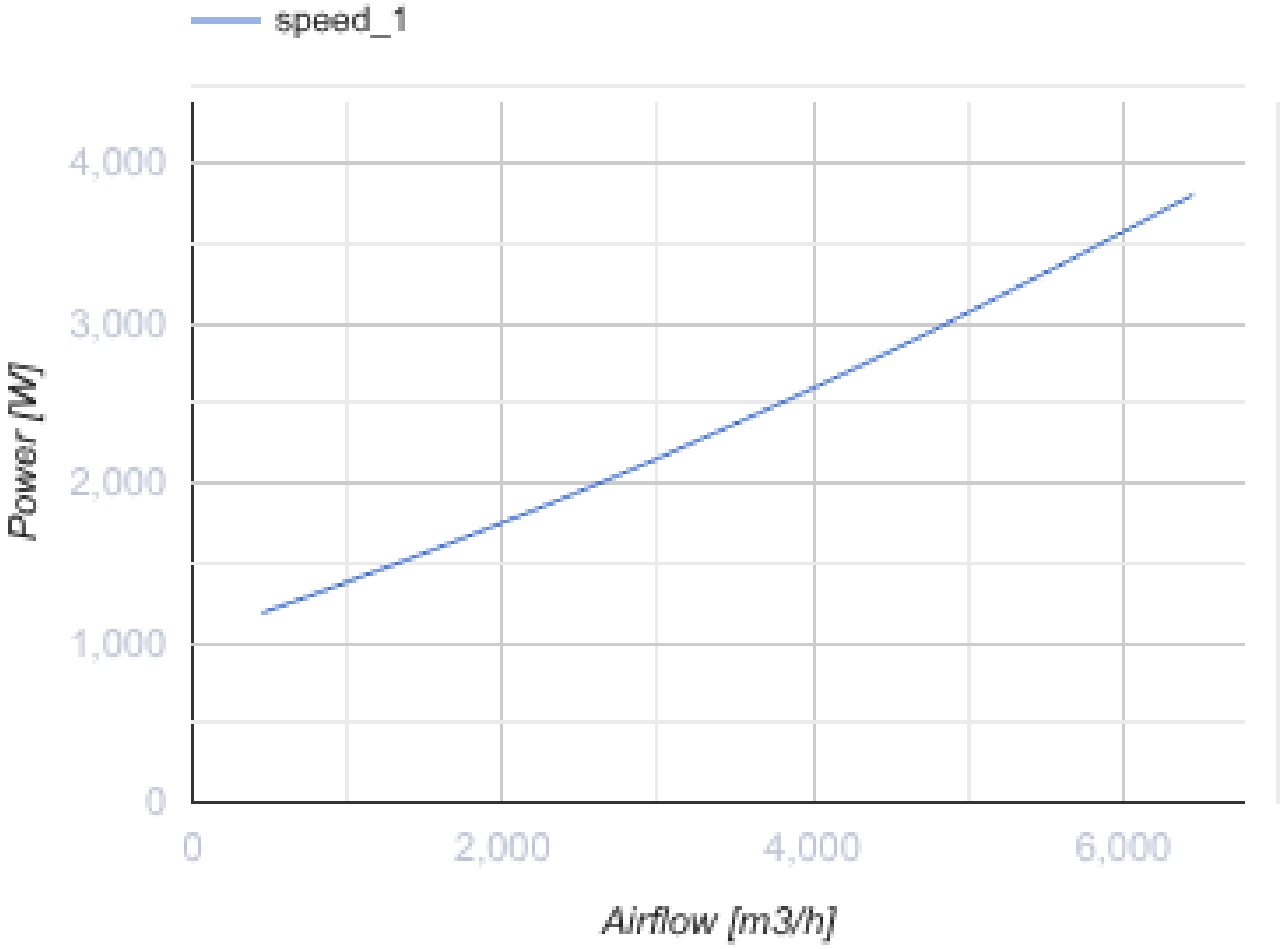

Dimensions

B	B1	B2	H	H1	H2	H3	L
700	720	740	400	420	440	480	780

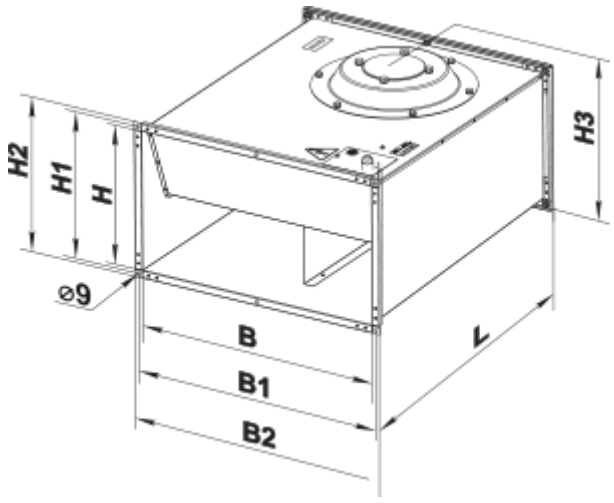

Accessories

For rectangular ducts

Name	Photo	Description
SR 700x400	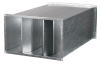	Plate silencer for installation in rectangular ducts

For rectangular ducts

Name	Photo	Description
FB 700x400		Rectangular panel air filters
FBK 700x400-4		Rectangular bag air filters
FBK 700x400-5		Rectangular bag air filters
FBK 700x400-7		Rectangular bag air filters

For rectangular ducts

Name	Photo	Description
KG 700x400		Gravity valve for automatic airflow shut-off in round air ducts

For rectangular ducts

Name	Photo	Description
VVG 700x400		Flexible anti-vibration inserts for round air ducts

For rectangular ducts

Name	Photo	Description
PR 700x400	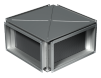	Cross-flow plate heat exchangers for rectangular air ducts

Mixing chambers

Name	Photo	Description

SKRA 700x400/24		Mixing chambers for mixing (recirculating) part of the exhaust air with the outdoor air in the appropriate proportion

Water heaters

Name	Photo	Description
NKV 700x400-2		Inline water supply air heaters or heater for air handling units with a rectangular cross-section
NKV 700x400-3		Inline water supply air heaters or heater for air handling units with a rectangular cross-section

Electrical heaters

Name	Photo	Description
NK 700x400-18,0-3		Rectangular electric inline heaters
NK 700x400-27,0-3		Rectangular electric inline heaters
NK 700x400-36,0-3		Rectangular electric inline heaters
NK 700x400-18,0-3 U		Rectangular electric inline heaters with control unit
NK 700x400-27,0-3 U		Rectangular electric inline heaters with control unit
NK 700x400-36,0-3 U		Rectangular electric inline heaters with control unit

Airflow regulators

Name	Photo	Description
RRV 700x400		Air flow controllers

Speed controllers

Name	Photo	Description

RSA5D-6,0-M		Three phase speed controller

Water coolers

Name	Photo	Description
OKW 700x400-3		Rectangular inline water coolers

Freon coolers

Name	Photo	Description
OKF 700x400-3		Rectangular inline direct evaporative coolers

Ecodesign

Trademark	Vents
Model	VKPF 4D 700x400
Type of drive installed	External MSD or VSD
Type of heat recovery system	None
Nominal external pressure (Pa)	751
Maximum external leakage rates (%)	2.7
Static efficiency (%)	36.5
Declared typology	NRVU UVU
Effective electric power input (kW)	1.89
Sound power level (dB(A))	85