VKPF 4D 600x350



Centrifugal inline fans with forward curved blades

• Sound pressure level LpA at 3 m: 60
• Impeller type: Centrifugal impeller with forward curved blades
• Casing material: Galvanized steel
• Installation in any position

	Unit of measurement	VKPF 4D 600x350
Connected air duct size	mm	600x350
Phases	-	3
Minimum supply voltage	V	400
Maximum supply voltage	V	400
Power supply frequency	Hz	50
Rated power	W	2460
Unit current	A	3.93
Maximum airflow	m^3/h	5020
Rotation speed at 50hz	-	1300
Sound pressure level LpA at 3 m	dB(A)	60
Weight	kg	49.5
Transported air temperature (max)	°C	40
Transported air temperature (min)	°C	-20
Ingress protection rating	-	IPX4
Ingress protection rating of the drive	-	IP44
Impeller material	-	Galvanized steel

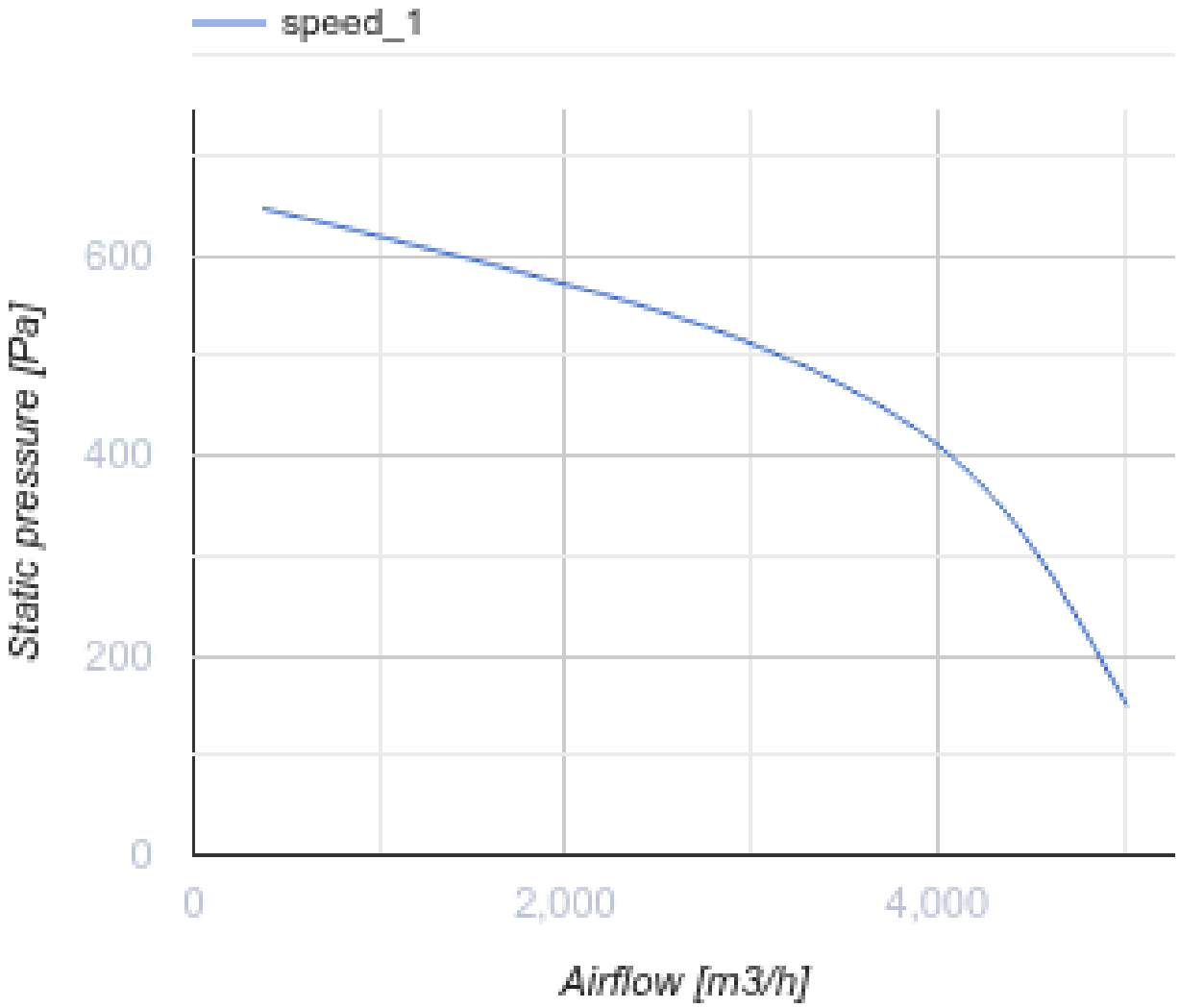
speed_1
600
400
200
0
Static pressure [Pa]
0
2,000
4,000
Airflow [m3/h]

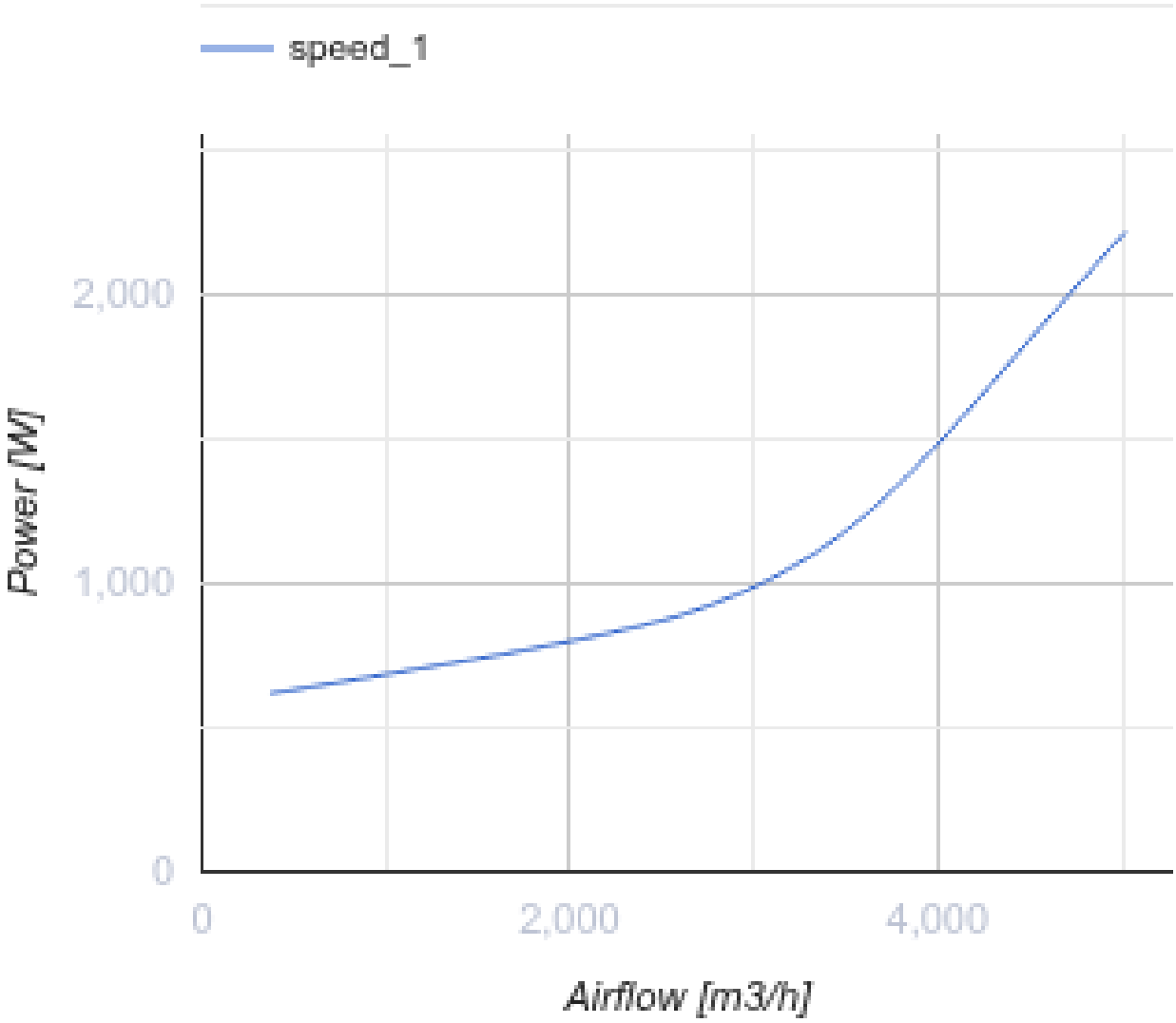

Dimensions

B	B1	B2	H	H1	H2	H3	L
600	620	640	350	370	390	425	735

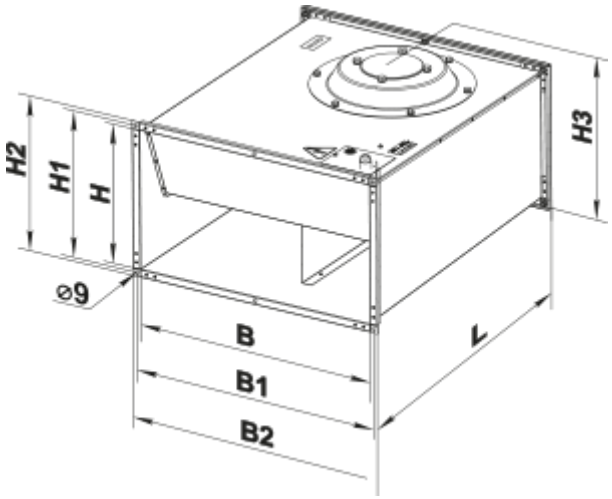

Accessories

For rectangular ducts

Name	Photo	Description
SR 600x350		Plate silencer for installation in rectangular ducts

For rectangular ducts

Name	Photo	Description
FB 600x350		Rectangular panel air filters
FBK 600x350-4		Rectangular bag air filters
FBK 600x350-5		Rectangular bag air filters
FBK 600x350-7		Rectangular bag air filters

For rectangular ducts

Name	Photo	Description
KOM1 600x350		Backdraught gravity dampe for shutting off air flow in rectangular air ducts
KR 600x350		Air dampers for controlling air flow in rectangular air ducts

KG 600x350		Gravity valve for automatic airflow shut-off in round air ducts

For rectangular ducts

Name	Photo	Description
VVG 600x350		Flexible anti-vibration inserts for round air ducts

For rectangular ducts

Name	Photo	Description
PR 600x350	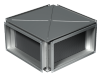	Cross-flow plate heat exchangers for rectangular air ducts

Mixing chambers

Name	Photo	Description
SKRA 600x350/24		Mixing chambers for mixing (recirculating) part of the exhaust air with the outdoor air in the appropriate proportion

Water heaters

Name	Photo	Description
NKV 600x350-2		Inline water supply air heaters or heater for air handling units with a rectangular cross-section
NKV 600x350-4		Inline water supply air heaters or heater for air handling units with a rectangular cross-section

Electrical heaters

Name	Photo	Description
NK 600x350-9,0-3		Rectangular electric inline heaters
NK 600x350-12,0-3		Rectangular electric inline heaters
NK 600x350-15,0-3		Rectangular electric inline heaters

NK 600x350-18,0-3		Rectangular electric inline heaters
NK 600x350-21,0-3		Rectangular electric inline heaters
NK 600x350-24,0-3		Rectangular electric inline heaters
NK 600x350-9,0-3 U		Rectangular electric inline heaters with control unit
NK 600x350-12,0-3 U		Rectangular electric inline heaters with control unit
NK 600x350-15,0-3 U		Rectangular electric inline heaters with control unit
NK 600x350-18,0-3 U		Rectangular electric inline heaters with control unit
NK 600x350-21,0-3 U		Rectangular electric inline heaters with control unit
NK 600x350-24,0-3 U		Rectangular electric inline heaters with control unit

Airflow regulators

Name	Photo	Description
RRV 600x350		Air flow controllers

Water coolers

Name	Photo	Description
OKW 600x350-3		Rectangular inline water coolers

Freon coolers

Name	Photo	Description

OKF 600x350-3		Rectangular inline direct evaporative coolers

Speed controllers

Name	Photo	Description
RSA5D-4,0-M		Three phase speed controller

Ecodesign

Trademark	Vents
Model	VKPF 4D 600x350
Type of drive installed	External MSD or VSD
Type of heat recovery system	None
Nominal external pressure (Pa)	542
Maximum external leakage rates (%)	2.7
Static efficiency (%)	36.9
Declared typology	NRVU UVU
Effective electric power input (kW)	1.12
Sound power level (dB(A))	80