VKP 800x500 M3 EC

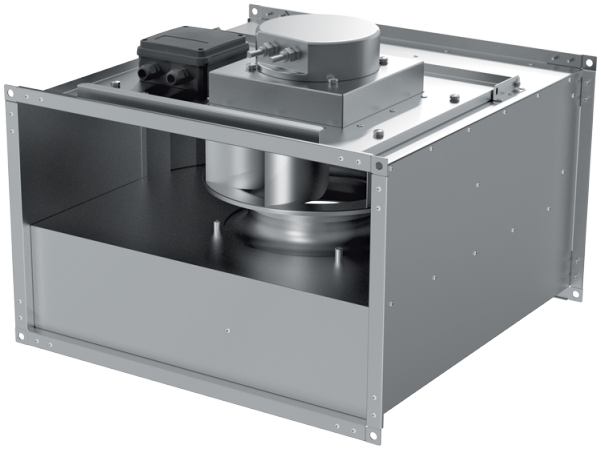

Centrifugal inline fans with backward curved blades with EC-motors

- Sound pressure level LpA at 3 m: 60
- Impeller type: Centrifugal impeller with backward curved blades
- Casing material: Galvanized steel
- Installation in any position

	Unit of measurement	VKP 800x500 M3 EC
Connected air duct size	mm	800x500
Phases	-	3
Maximum supply voltage	V	400
Minimum supply voltage	V	400
Power supply frequency	Hz	50/60
Rated power	W	2025
Unit current	A	2.01
Maximum airflow	m³/h	8395
Rotation speed at 50hz	-	1470
Sound pressure level LpA at 3 m	dB(A)	60
Weight	kg	62.3
Transported air temperature (max)	°C	50
Transported air temperature (min)	°C	-25
Ingress protection rating	-	IPX4
Ingress protection rating of the drive	-	IP54
Impeller material	-	Aluminium

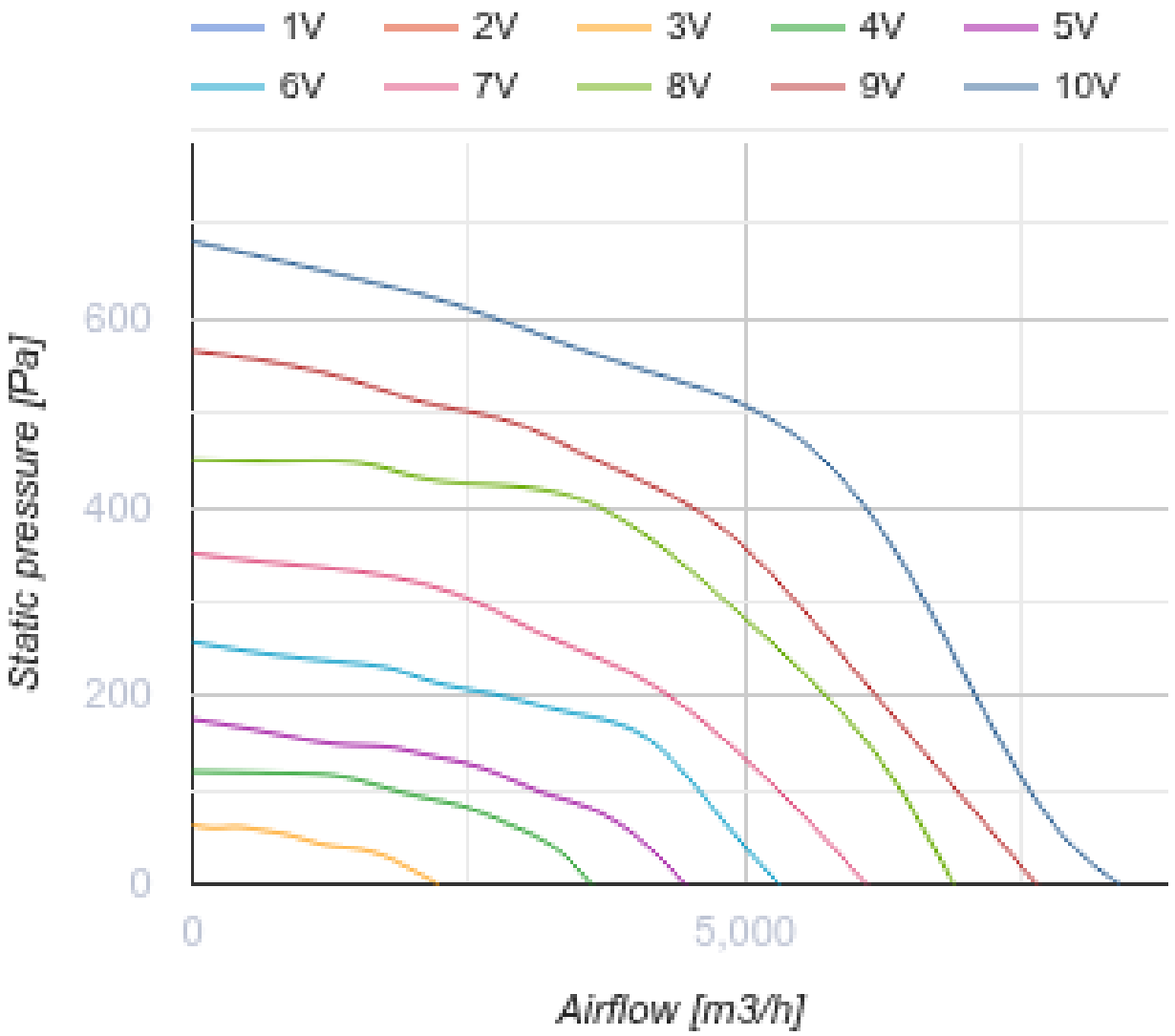
1V
2V
3V
4V
5V
6V
7V
8V
9V
10V
600
400
200
0
Static pressure [Pa]
0
5,000
Airflow [m3/h]

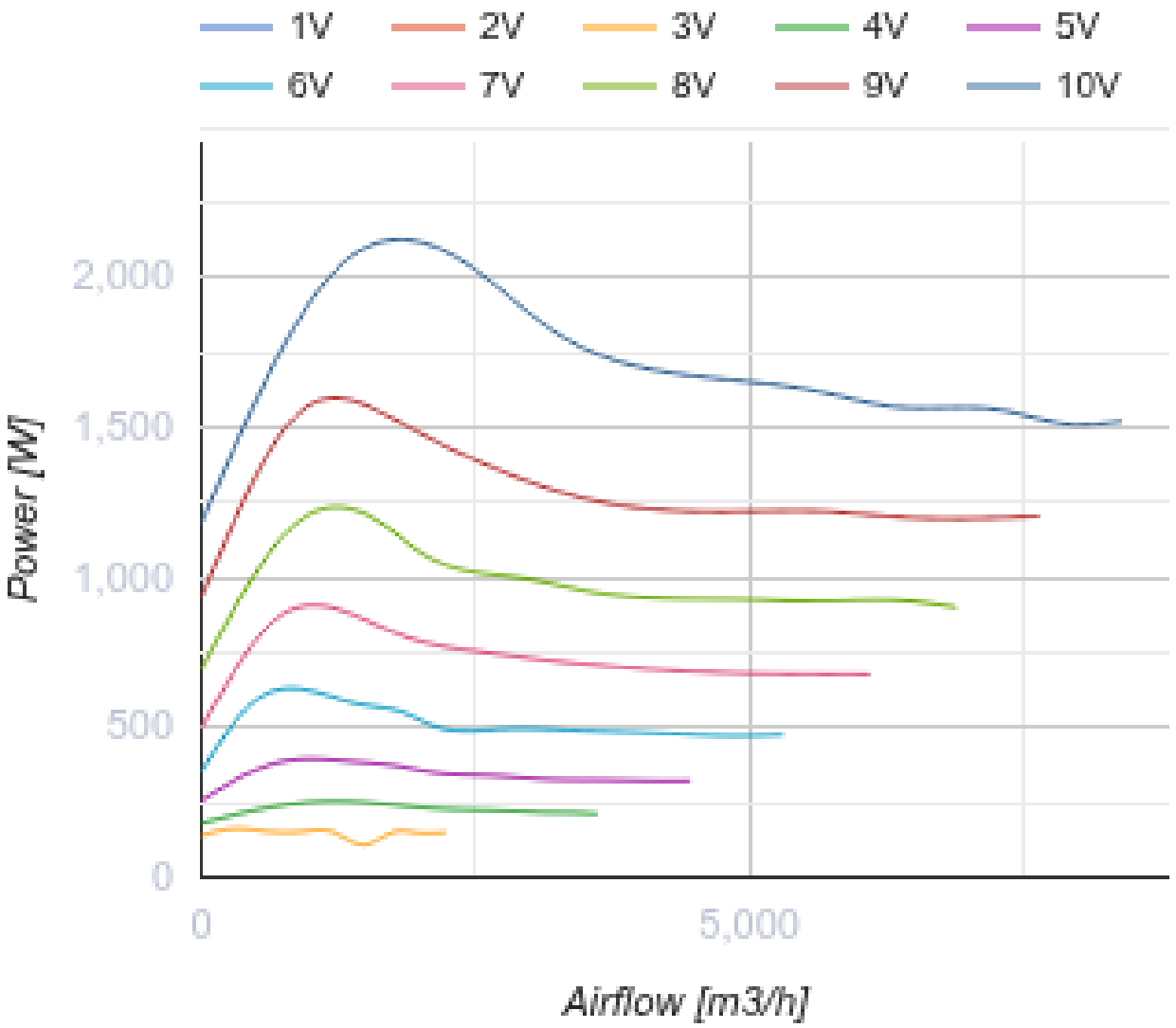

Dimensions

B	B1	B2	H	H1	H2	H3	L
800	820	840	500	520	540	614	850

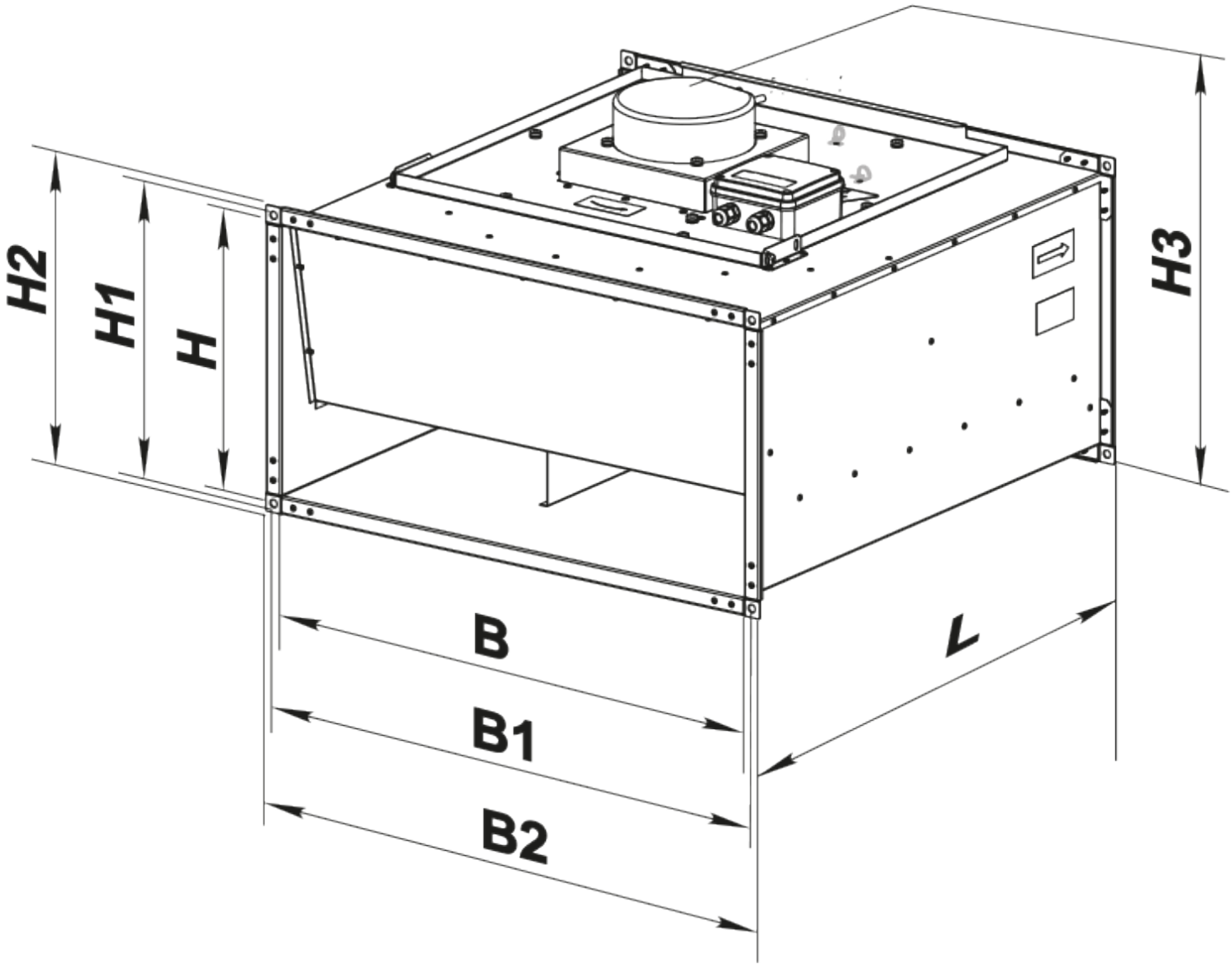

Accessories

For rectangular ducts

Name	Photo	Description

SR 800x500	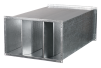	Plate silencer for installation in rectangular ducts

For rectangular ducts

Name	Photo	Description
FB 800x500		Rectangular panel air filters
FBK 800x500-4		Rectangular bag air filters
FBK 800x500-5		Rectangular bag air filters
FBK 800x500-7		Rectangular bag air filters

For rectangular ducts

Name	Photo	Description
VVG 800x500		Flexible anti-vibration inserts for round air ducts

Water heaters

Name	Photo	Description
NKV 800x500-2		Inline water supply air heaters or heater for air handling units with a rectangular cross-section
NKV 800x500-3		Inline water supply air heaters or heater for air handling units with a rectangular cross-section

Electrical heaters

Name	Photo	Description
NK 800x500-27,0-3		Rectangular electric inline heaters
NK 800x500-36,0-3		Rectangular electric inline heaters

NK 800x500-54,0-3		Rectangular electric inline heaters

Airflow regulators

Name	Photo	Description
RRV 800x500		Air flow controllers

Water coolers

Name	Photo	Description
OKW 800x500-3		Rectangular inline water coolers

Freon coolers

Name	Photo	Description
OKF 800x500-3		Rectangular inline direct evaporative coolers

Ecodesign

Trademark	Vents
Model	VKP 800x500 M3 EC
Type of drive installed	Integrated VSD
Type of heat recovery system	None
Nominal external pressure (Pa)	460
Maximum external leakage rates (%)	2.7
Static efficiency (%)	48.5
Effective electric power input (kW)	1.621
Sound power level (dB(A))	80
Declared typology	NRVU UVU