# VKP 700x400 L3 EC

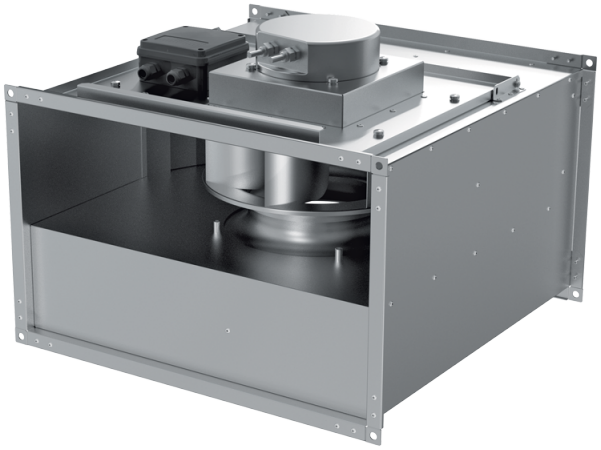

Centrifugal inline fans with backward curved blades with EC-motors

- Sound pressure level LpA at 3 m: 57
- Impeller type: Centrifugal impeller with backward curved blades
- Casing material: Galvanized steel
- Installation in any position

| | Unit of measurement | VKP 700x400 L3 EC |
|---|---|---|
| Connected air duct size | mm | 700x400 |
| Phases | - | 3 |
| Minimum supply voltage | V | 400 |
| Maximum supply voltage | V | 400 |
| Power supply frequency | Hz | 50/60 |
| Rated power | W | 2748 |
| Unit current | A | 2.8 |
| Maximum airflow | $m^3/h$ | 6810 |
| Rotation speed at 50hz | - | 2530 |
| Sound pressure level LpA at 3 m | dB(A) | 57 |
| Weight | kg | 43 |
| Transported air temperature (max) | °C | 50 |
| Transported air temperature (min) | °C | -25 |
| Ingress protection rating | - | IPX4 |
| Ingress protection rating of the drive | - | IP54 |
| Impeller material | - | Aluminium |

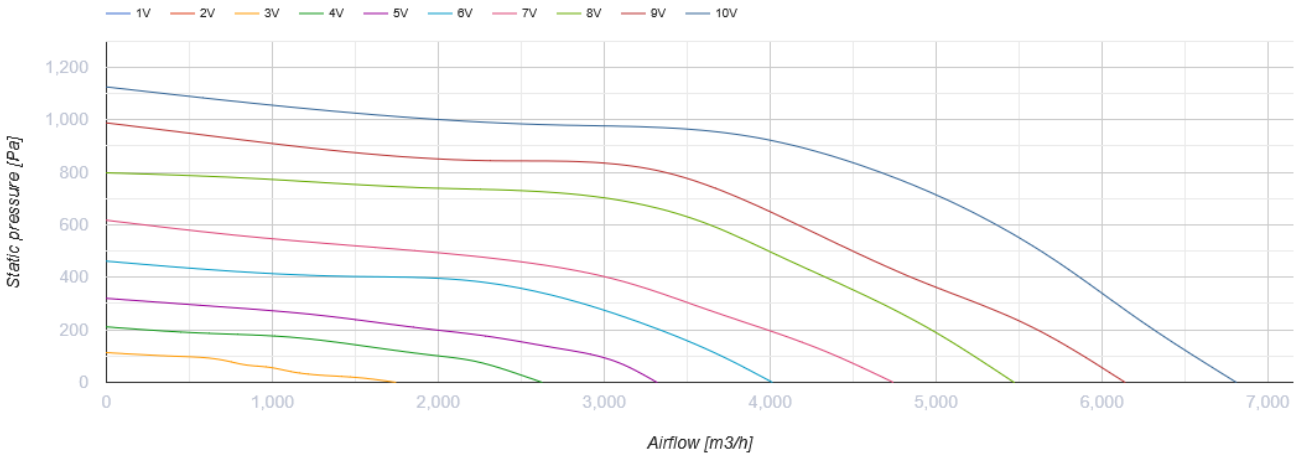


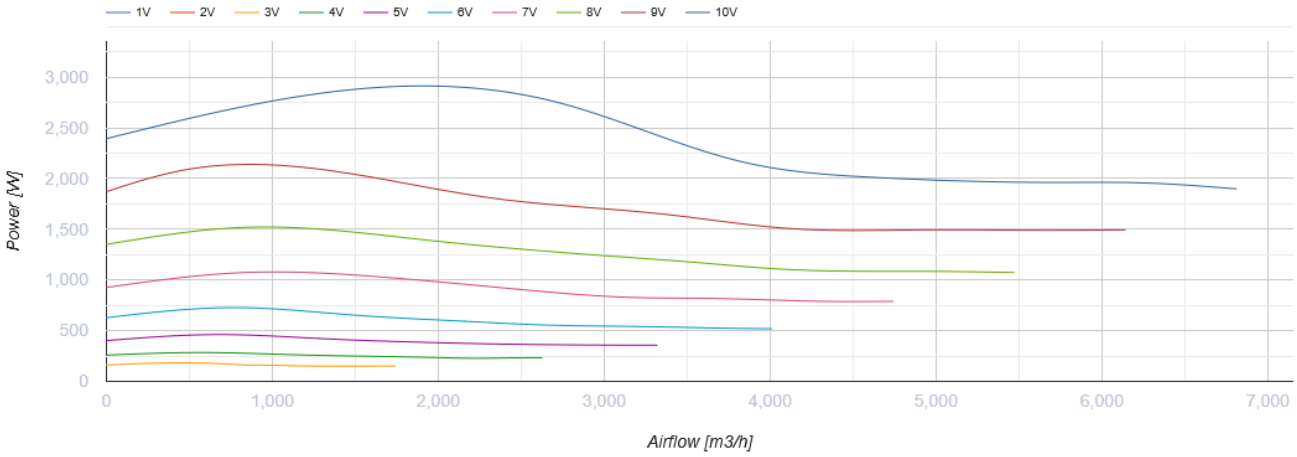


## Dimensions

| B | B1 | B2 | H | H1 | H2 | H3 | L |
|---|---|---|---|---|---|---|---|
| 700 | 720 | 740 | 400 | 420 | 440 | 555 | 750 |

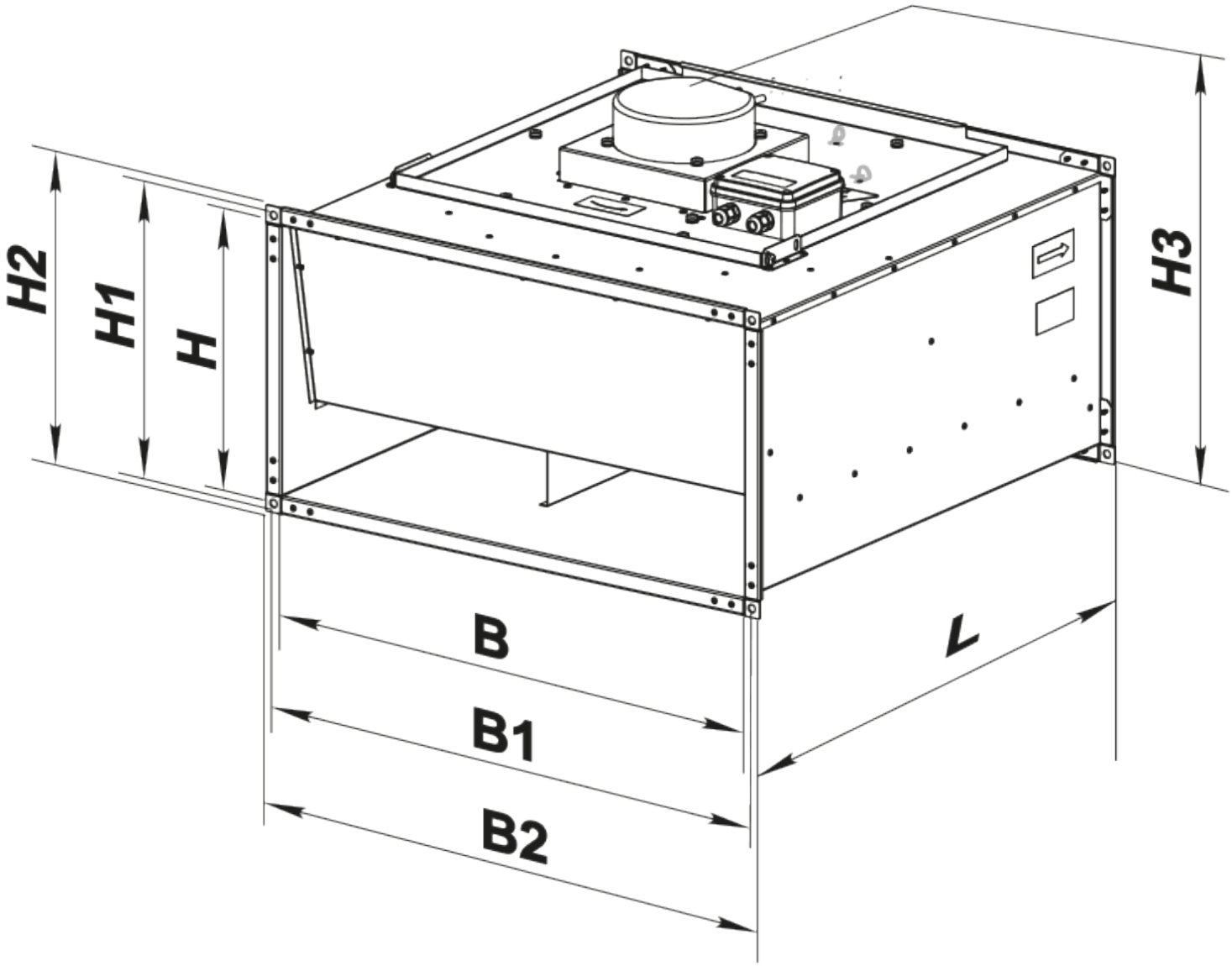


## Accessories

### For rectangular ducts

| Name | Photo | Description |
|---|---|---|

| | | |
|---|---|---|
| SR 700x400 | 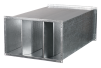 | Plate silencer for installation in rectangular ducts |

### For rectangular ducts

| Name | Photo | Description |
|---|---|---|
| FB 700x400 |  | Rectangular panel air filters |
| FBK 700x400-4 |  | Rectangular bag air filters |
| FBK 700x400-5 |  | Rectangular bag air filters |
| FBK 700x400-7 |  | Rectangular bag air filters |

### For rectangular ducts

| Name | Photo | Description |
|---|---|---|
| VVG 700x400 |  | Flexible anti-vibration inserts for round air ducts |

### Water heaters

| Name | Photo | Description |
|---|---|---|
| NKV 700x400-2 |  | Inline water supply air heaters or heater for air handling units with a rectangular cross-section |
| NKV 700x400-3 |  | Inline water supply air heaters or heater for air handling units with a rectangular cross-section |

### Electrical heaters

| Name | Photo | Description |
|---|---|---|
| NK 700x400-18,0-3 |  | Rectangular electric inline heaters |
| NK 700x400-27,0-3 |  | Rectangular electric inline heaters |

| | | |
|---|---|---|
| NK 700x400-36,0-3 |  | Rectangular electric inline heaters |

### Airflow regulators

| Name | Photo | Description |
|---|---|---|
| RRV 700x400 |  | Air flow controllers |

### Water coolers

| Name | Photo | Description |
|---|---|---|
| OKW 700x400-3 |  | Rectangular inline water coolers |

### Freon coolers

| Name | Photo | Description |
|---|---|---|
| OKF 700x400-3 |  | Rectangular inline direct evaporative coolers |

## Ecodesign

| Trademark | Vents |
|---|---|
| Model | VKP 700x400 L3 EC |
| Type of drive installed | Integrated VSD |
| Type of heat recovery system | None |
| Nominal external pressure (Pa) | 601 |
| Maximum external leakage rates (%) | 2.7 |
| Static efficiency (%) | 57.7 |
| Declared typology | NRVU UVU |
| Effective electric power input (kW) | 1.161 |
| Sound power level (dB(A)) | 77 |