VKP 600x350 M1 EC

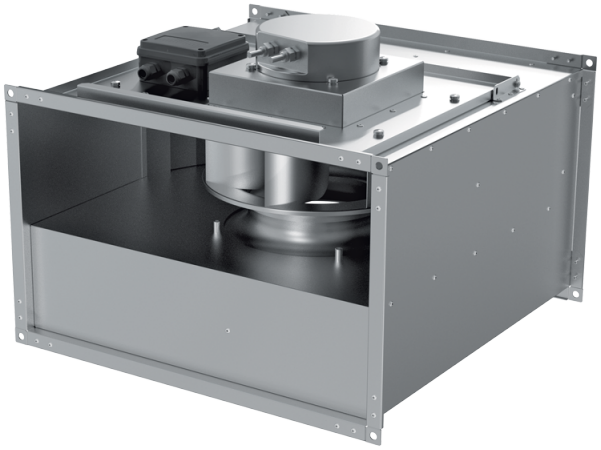

Centrifugal inline fans with backward curved blades with EC-motors

- Sound pressure level LpA at 3 m: 49
- Impeller type: Centrifugal impeller with backward curved blades
- Casing material: Galvanized steel
- Installation in any position

	Unit of measurement	VKP 600x350 M1 EC
Connected air duct size	mm	600x350
Phases	-	1
Minimum supply voltage	V	230
Maximum supply voltage	V	230
Power supply frequency	Hz	50/60
Rated power	W	361
Unit current	A	2.62
Maximum airflow	m^3/h	2815
Rotation speed at 50hz	-	2000
Sound pressure level LpA at 3 m	dB(A)	49
Weight	kg	25.2
Transported air temperature (max)	°C	50
Transported air temperature (min)	°C	-25
Ingress protection rating	-	IPX4
Ingress protection rating of the drive	-	IP54
Impeller material	-	Aluminium

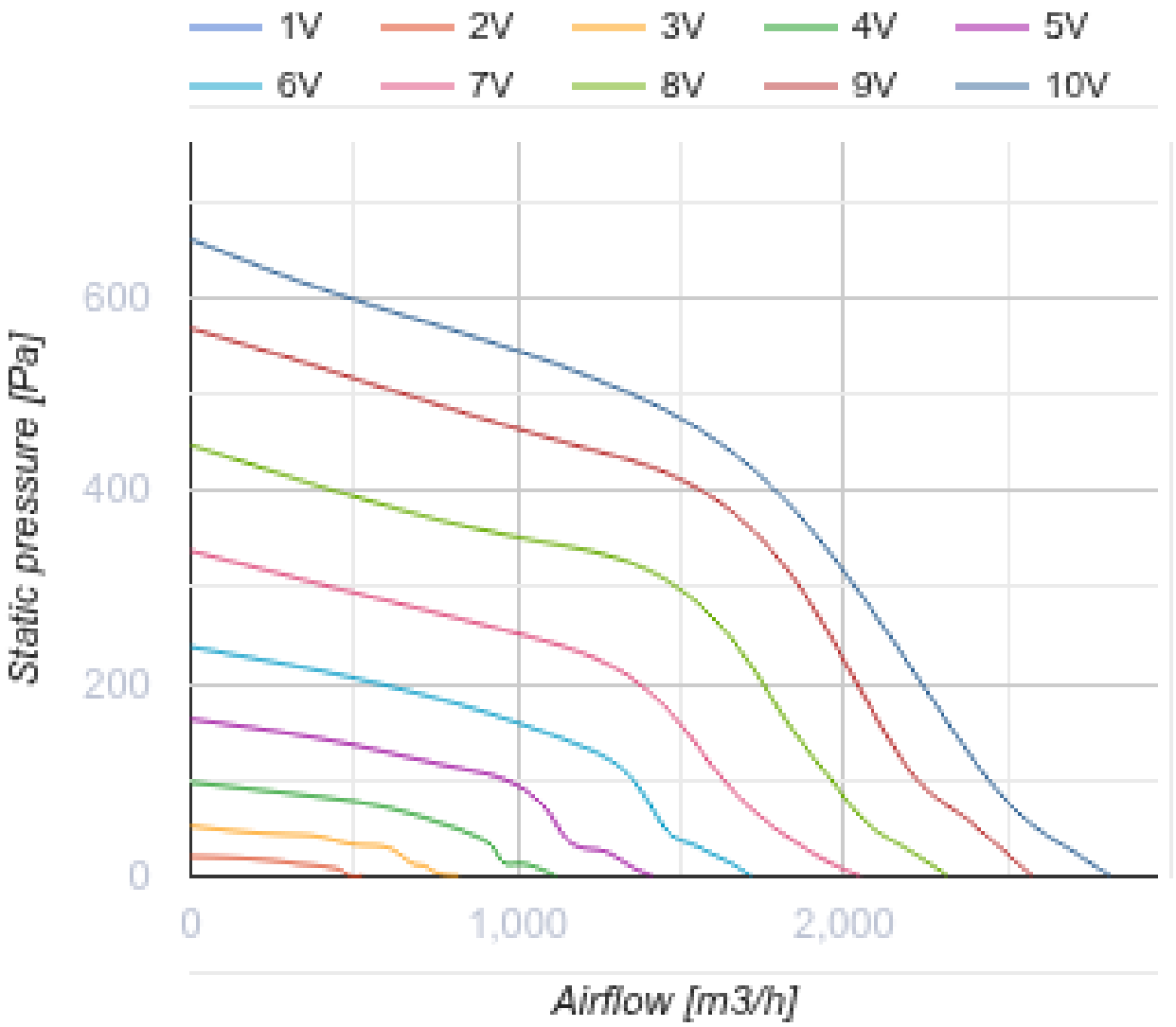
1V
2V
3V
4V
5V
6V
7V
8V
9V
10V
600
400
200
0
Static pressure [Pa]
0
1,000
2,000
Airflow [m3/h]

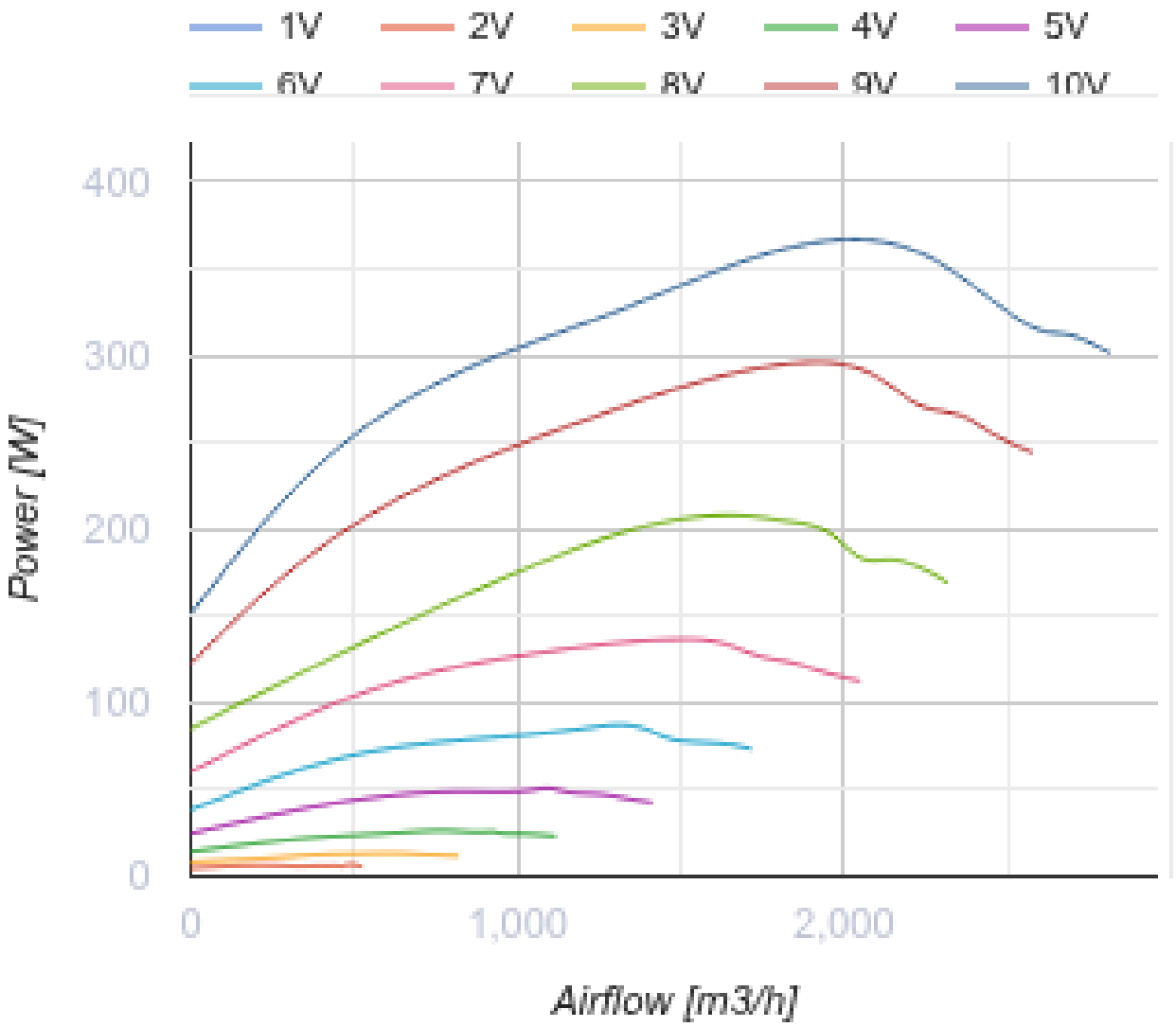

Dimensions

B	B1	B2	H	H1	H2	H3	L
600	620	640	350	370	390	457	650

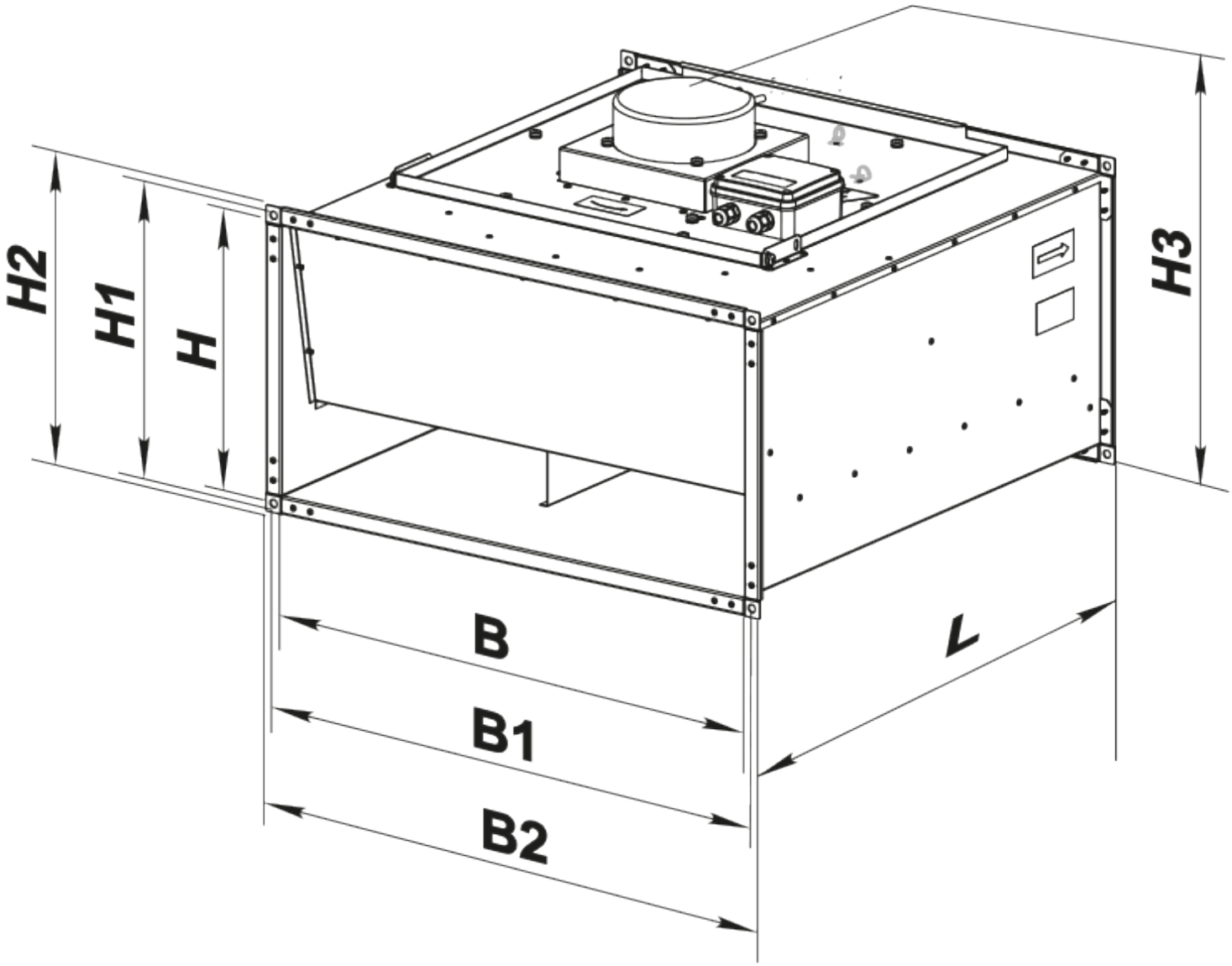

Accessories

For rectangular ducts

Name	Photo	Description

SR 600x350	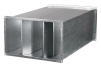	Plate silencer for installation in rectangular ducts

For rectangular ducts

Name	Photo	Description
FB 600x350		Rectangular panel air filters
FBK 600x350-4		Rectangular bag air filters
FBK 600x350-5		Rectangular bag air filters
FBK 600x350-7		Rectangular bag air filters

For rectangular ducts

Name	Photo	Description
KOM1 600x350		Backdraught gravity dampe for shutting off air flow in rectangular air ducts
KR 600x350		Air dampers for controlling air flow in rectangular air ducts

For rectangular ducts

Name	Photo	Description
VVG 600x350		Flexible anti-vibration inserts for round air ducts

Water heaters

Name	Photo	Description
NKV 600x350-2		Inline water supply air heaters or heater for air handling units with a rectangular cross-section
NKV 600x350-4		Inline water supply air heaters or heater for air handling units with a rectangular cross-section

Electrical heaters

Name	Photo	Description
NK 600x350-9,0-3		Rectangular electric inline heaters
NK 600x350-12,0-3		Rectangular electric inline heaters
NK 600x350-15,0-3		Rectangular electric inline heaters
NK 600x350-18,0-3		Rectangular electric inline heaters
NK 600x350-21,0-3		Rectangular electric inline heaters
NK 600x350-24,0-3		Rectangular electric inline heaters

Airflow regulators

Name	Photo	Description
RRV 600x350		Air flow controllers

Water coolers

Name	Photo	Description
OKW 600x350-3		Rectangular inline water coolers

Freon coolers

Name	Photo	Description
OKF 600x350-3		Rectangular inline direct evaporative coolers

Ecodesign

Trademark	Vents
Model	VKP 600x350 M1 EC
Type of drive installed	Integrated VSD
Type of heat recovery system	None
Nominal external pressure (Pa)	445
Maximum external leakage rates (%)	2.7
Static efficiency (%)	65.3
Declared typology	NRVU UVU
Effective electric power input (kW)	0.263
Sound power level (dB(A))	69