# VKP 500x250 M1 EC

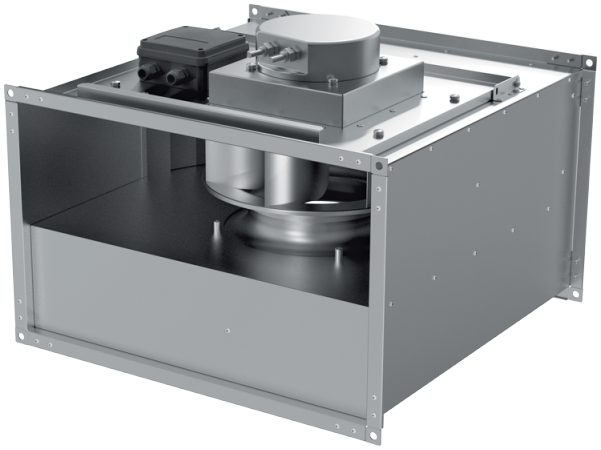

Centrifugal inline fans with backward curved blades with EC-motors

- Sound pressure level LpA at 3 m: 45
- Impeller type: Centrifugal impeller with backward curved blades
- Casing material: Galvanized steel
- Installation in any position

| | Unit of measurement | VKP 500x250 M1 EC |
|---|---|---|
| Connected air duct size | mm | 500x250 |
| Phases | - | 1 |
| Maximum supply voltage | V | 230 |
| Minimum supply voltage | V | 230 |
| Power supply frequency | Hz | 50/60 |
| Rated power | W | 252 |
| Unit current | A | 1.85 |
| Maximum airflow | m³/h | 1590 |
| Rotation speed at 50hz | - | 2500 |
| Sound pressure level LpA at 3 m | dB(A) | 45 |
| Weight | kg | 15.7 |
| Transported air temperature (max) | °C | 50 |
| Transported air temperature (min) | °C | -25 |
| Ingress protection rating | - | IPX4 |
| Ingress protection rating of the drive | - | IP54 |
| Impeller material | - | Galvanized steel |

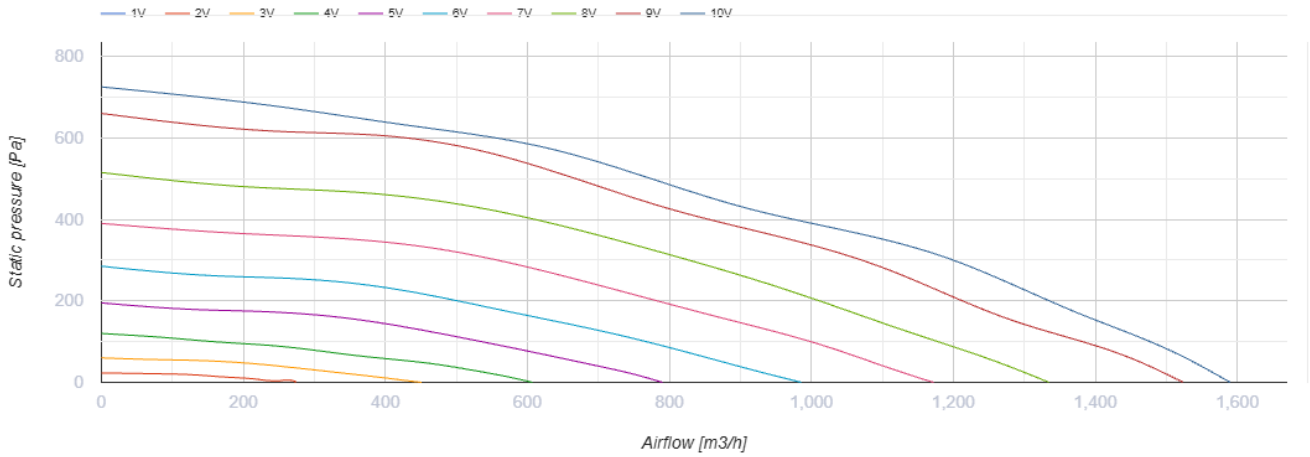


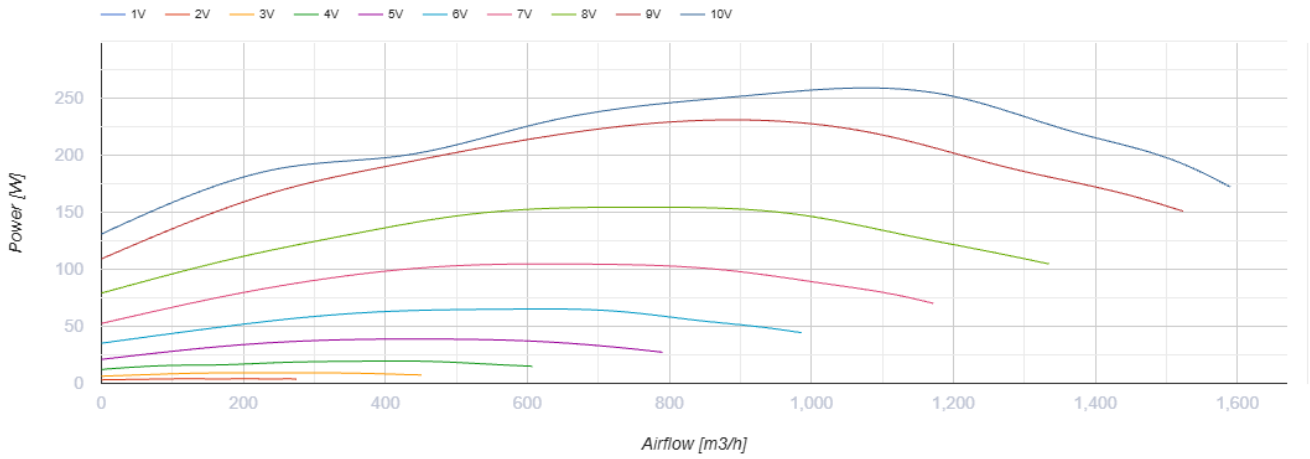


## Dimensions

| B | B1 | B2 | H | H1 | H2 | H3 | L |
|---|---|---|---|---|---|---|---|
| 500 | 520 | 540 | 250 | 270 | 290 | 328 | 530 |

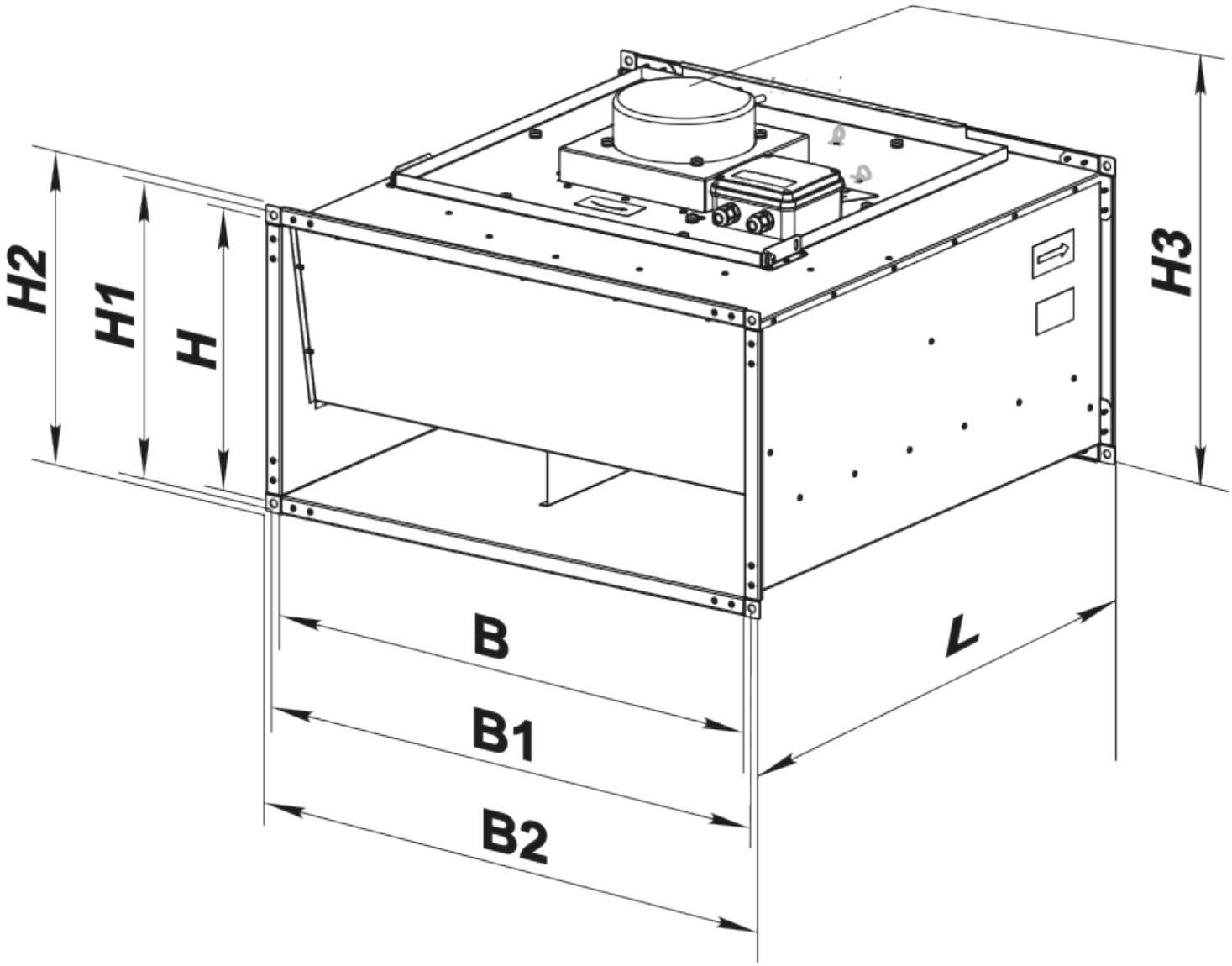


## Accessories

### For rectangular ducts

| Name | Photo | Description |
|---|---|---|

| | | |
|---|---|---|
| SR 500x250 | 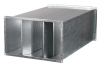 | Plate silencer for installation in rectangular ducts |

### For rectangular ducts

| Name | Photo | Description |
|---|---|---|
| FB 500x250 |  | Rectangular panel air filters |
| FBK 500x250-4 |  | Rectangular bag air filters |
| FBK 500x250-5 |  | Rectangular bag air filters |
| FBK 500x250-7 |  | Rectangular bag air filters |

### For rectangular ducts

| Name | Photo | Description |
|---|---|---|
| KOM1 500x250 |  | Backdraught gravity dampe for shutting off air flow in rectangular air ducts |
| KR 500x250 |  | Air dampers for controlling air flow in rectangular air ducts |

### For rectangular ducts

| Name | Photo | Description |
|---|---|---|
| VVG 500x250 |  | Flexible anti-vibration inserts for round air ducts |

### Water heaters

| Name | Photo | Description |
|---|---|---|
| NKV 500x250-2 |  | Inline water supply air heaters or heater for air handling units with a rectangular cross-section |
| NKV 500x250-4 |  | Inline water supply air heaters or heater for air handling units with a rectangular cross-section |

### Electrical heaters

| Name | Photo | Description |
|---|---|---|
| NK 500x250-6,0-3 |  | Rectangular electric inline heaters |
| NK 500x250-7,5-3 |  | Rectangular electric inline heaters |
| NK 500x250-9,0-3 |  | Rectangular electric inline heaters |
| NK 500x250-10,5-3 |  | Rectangular electric inline heaters |
| NK 500x250-12,0-3 |  | Rectangular electric inline heaters |
| NK 500x250-15,0-3 |  | Rectangular electric inline heaters |
| NK 500x250-18,0-3 |  | Rectangular electric inline heaters |
| NK 500x250-21,0-3 |  | Rectangular electric inline heaters |

### Airflow regulators

| Name | Photo | Description |
|---|---|---|
| RRV 500x250 |  | Air flow controllers |

### Water coolers

| Name | Photo | Description |
|---|---|---|
| OKW 500x250-3 |  | Rectangular inline water coolers |

### Freon coolers

| Name | Photo | Description |
|---|---|---|
| OKF 500x250-3 |  | Rectangular inline direct evaporative coolers |

## Ecodesign

| Trademark | Vents |
|---|---|
| Model | VKP 500x250 M1 EC |
| Type of drive installed | Integrated VSD |
| Type of heat recovery system | None |
| Nominal external pressure (Pa) | 330 |
| Maximum external leakage rates (%) | 2.7 |
| Static efficiency (%) | 53.1 |
| Effective electric power input (kW) | 0.154 |
| Sound power level (dB(A)) | 65 |
| Declared typology | NRVU UVU |