VKP 4D 700x400



Centrifugal inline fans with backward curved blades

• Sound pressure level LpA at 3 m: 57
• Impeller type: Centrifugal impeller with backward curved blades
• Casing material: Galvanized steel
• Installation in any position

	Unit of measurement	VKP 4D 700x400
Connected air duct size	mm	700x400
Phases	-	3
Maximum supply voltage	V	400
Minimum supply voltage	V	400
Power supply frequency	Hz	50
Rated power	W	828
Unit current	A	1.62
Maximum airflow	m^3/h	5580
Rotation speed at 50hz	-	1418
Sound pressure level LpA at 3 m	dB(A)	57
Weight	kg	41
Transported air temperature (max)	°C	60
Transported air temperature (min)	°C	-30
Ingress protection rating	-	IPX4
Ingress protection rating of the drive	-	IP44
Impeller material	-	Aluminium

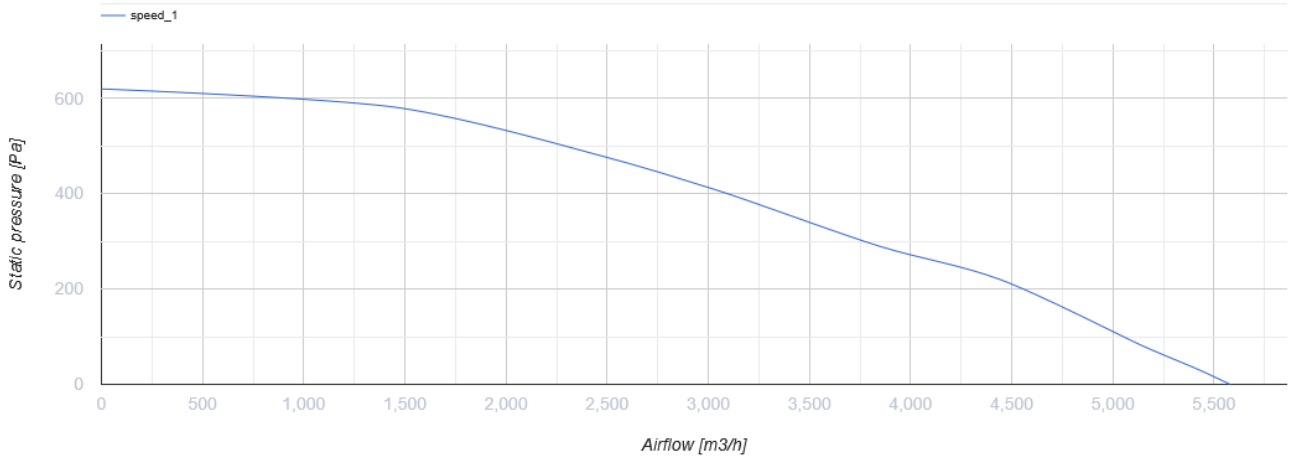

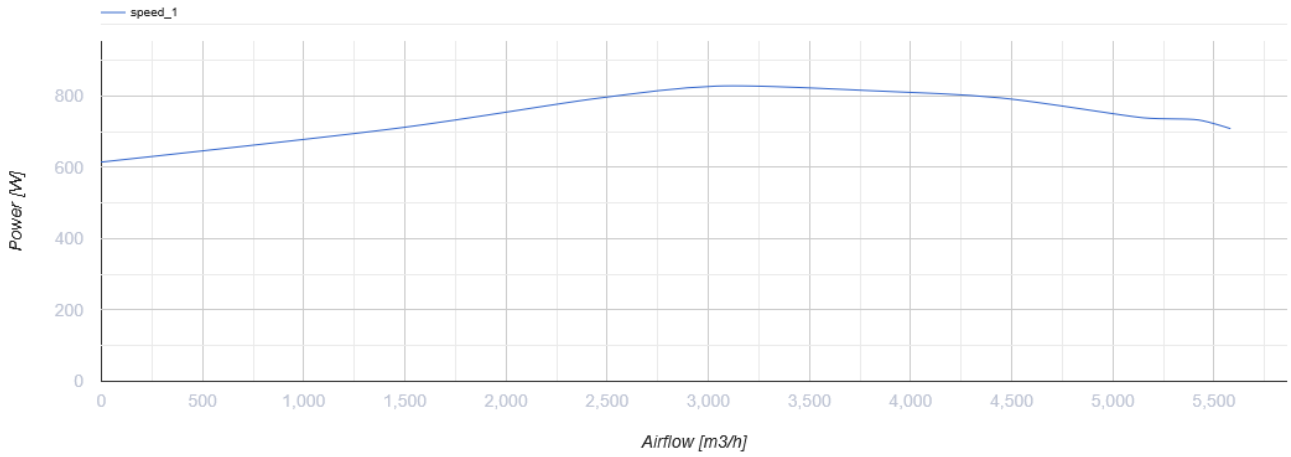

Dimensions

B	B1	B2	H	H1	H2	H3	L
700	720	740	400	420	440	440	753

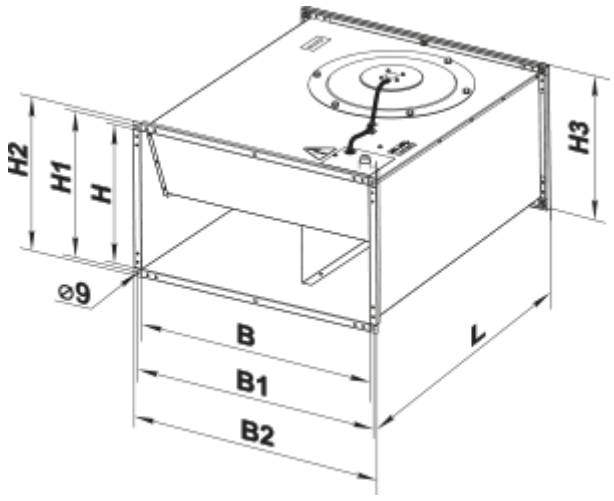

Accessories

For rectangular ducts

Name	Photo	Description
SR 700x400	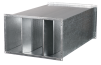	Plate silencer for installation in rectangular ducts

For rectangular ducts

Name	Photo	Description
FB 700x400		Rectangular panel air filters
FBK 700x400-4		Rectangular bag air filters
FBK 700x400-5		Rectangular bag air filters
FBK 700x400-7		Rectangular bag air filters

For rectangular ducts

Name	Photo	Description
VVG 700x400		Flexible anti-vibration inserts for round air ducts

Water heaters

Name	Photo	Description
NKV 700x400-2		Inline water supply air heaters or heater for air handling units with a rectangular cross-section
NKV 700x400-3		Inline water supply air heaters or heater for air handling units with a rectangular cross-section

Electrical heaters

Name	Photo	Description
NK 700x400-18,0-3		Rectangular electric inline heaters

NK 700x400-27,0-3		Rectangular electric inline heaters
NK 700x400-36,0-3		Rectangular electric inline heaters

Airflow regulators

Name	Photo	Description
RRV 700x400		Air flow controllers

Water coolers

Name	Photo	Description
OKW 700x400-3		Rectangular inline water coolers

Freon coolers

Name	Photo	Description
OKF 700x400-3		Rectangular inline direct evaporative coolers

Ecodesign

Trademark	Vents
Model	VKP 4D 700x400
Type of drive installed	External MSD or VSD
Type of heat recovery system	None
Nominal external pressure (Pa)	408
Maximum external leakage rates (%)	2.7
Static efficiency (%)	42.5
Effective electric power input (kW)	0.828
Sound power level (dB(A))	81
Declared typology	NRVU UVU