VKP 4D 500x300



Centrifugal inline fans with backward curved blades

• Sound pressure level LpA at 3 m: 52
• Impeller type: Centrifugal impeller with backward curved blades
• Casing material: Galvanized steel
• Installation in any position

	Unit of measurement	VKP 4D 500x300
Connected air duct size	mm	500x300
Phases	-	3
Minimum supply voltage	V	400
Maximum supply voltage	V	400
Power supply frequency	Hz	50/60
Rated power	W	136
Unit current	A	0.34
Maximum airflow	m^3/h	1380
Rotation speed at 50hz	-	1360
Sound pressure level LpA at 3 m	dB(A)	52
Weight	kg	19.8
Transported air temperature (max)	°C	65
Transported air temperature (min)	°C	-25
Ingress protection rating	-	IPX4
Ingress protection rating of the drive	-	IP44
Impeller material	-	Aluminium

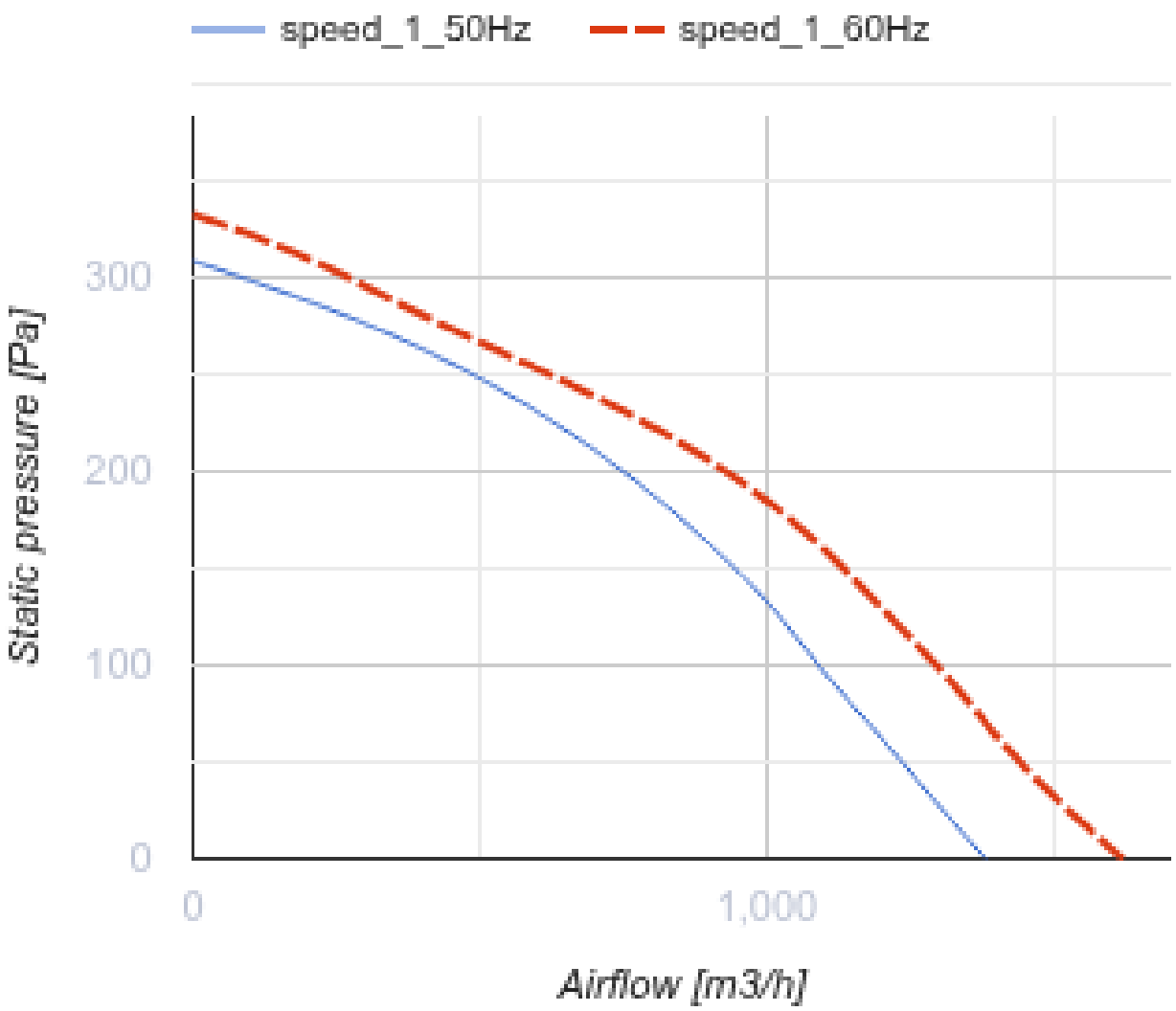
speed_1_50Hz
speed_1_60Hz
300
200
100
0
Static pressure [Pa]
0
1,000
Airflow [m3/h]

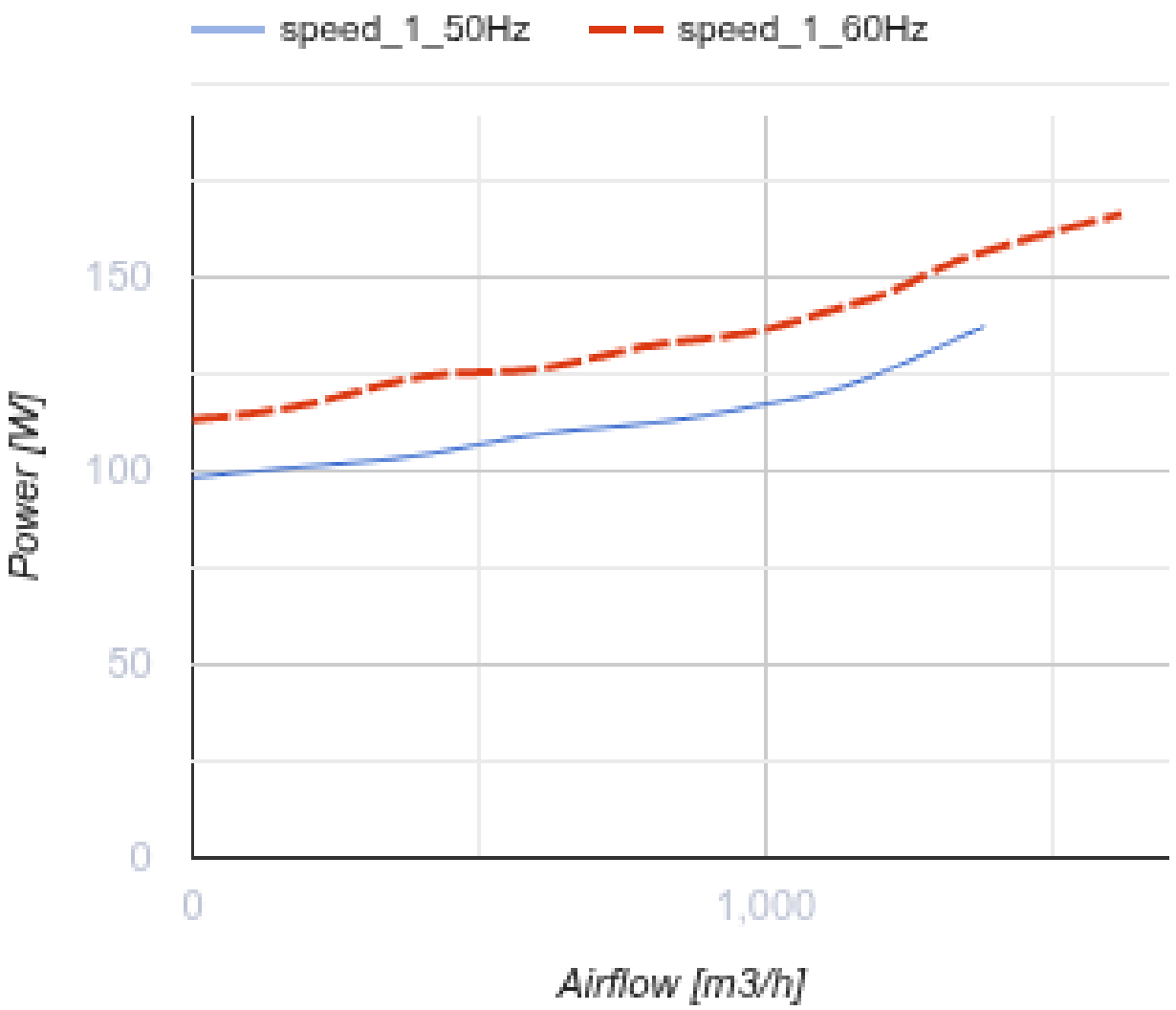

Dimensions

B	B1	B2	H	H1	H2	H3	L
500	520	540	300	320	340	340	680

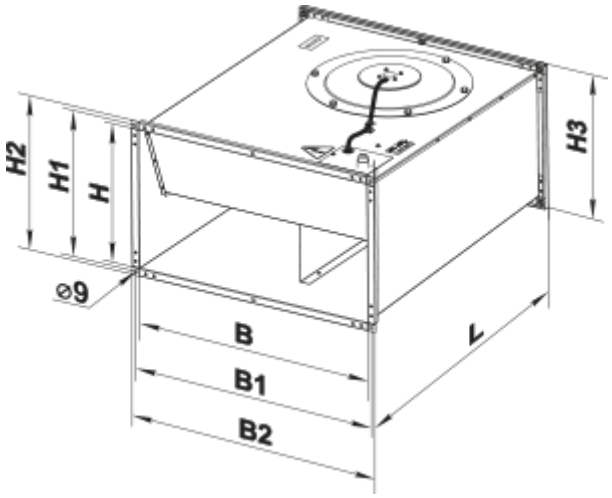

Accessories

For rectangular ducts

Name	Photo	Description
SR 500x300		Plate silencer for installation in rectangular ducts

For rectangular ducts

Name	Photo	Description
FB 500x300		Rectangular panel air filters
FBK 500x300-4		Rectangular bag air filters
FBK 500x300-5		Rectangular bag air filters
FBK 500x300-7		Rectangular bag air filters

For rectangular ducts

Name	Photo	Description
KOM1 500x300		Backdraught gravity dampe for shutting off air flow in rectangular air ducts
KR 500x300		Air dampers for controlling air flow in rectangular air ducts

For rectangular ducts

Name	Photo	Description
VVG 500x300		Flexible anti-vibration inserts for round air ducts

Water heaters

Name	Photo	Description
NKV 500x300-2		Inline water supply air heaters or heater for air handling units with a rectangular cross-section

Electrical heaters

Name	Photo	Description
NK 500x300-6,0-3		Rectangular electric inline heaters
NK 500x300-7,5-3		Rectangular electric inline heaters
NK 500x300-9,0-3		Rectangular electric inline heaters
NK 500x300-10,5-3		Rectangular electric inline heaters

Airflow regulators

Name	Photo	Description
RRV 500x300		Air flow controllers

Water coolers

Name	Photo	Description
OKW 500x300-3		Rectangular inline water coolers

Freon coolers

Name	Photo	Description

OKF 500x300-3		Rectangular inline direct evaporative coolers

Ecodesign

Trademark	Vents
Model	VKP 4D 500x300
Type of drive installed	External MSD or VSD
Type of heat recovery system	None
Nominal external pressure (Pa)	184
Maximum external leakage rates (%)	2.7
Static efficiency (%)	38.3
Declared typology	NRVU UVU
Effective electric power input (kW)	0.111
Sound power level (dB(A))	73