VKP 300x150 L1 EC

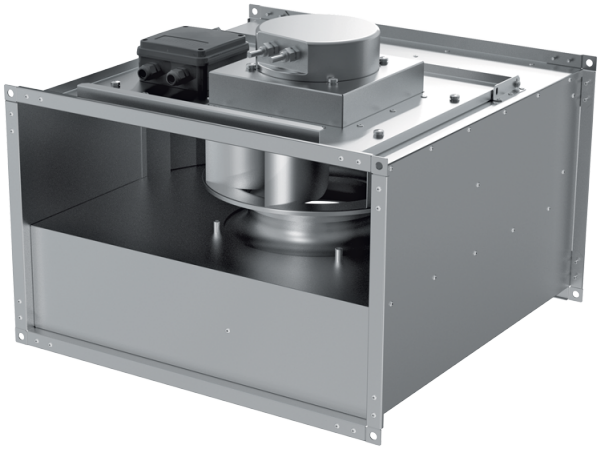

Centrifugal inline fans with backward curved blades with EC-motors

- Sound pressure level LpA at 3 m: 46
- Impeller type: Centrifugal impeller with backward curved blades
- Casing material: Galvanized steel
- Installation in any position

	Unit of measurement	VKP 300x150 L1 EC
Connected air duct size	mm	300x150
Phases	-	1
Minimum supply voltage	V	230
Maximum supply voltage	V	230
Power supply frequency	Hz	50/60
Rated power	W	101
Unit current	A	0.8
Maximum airflow	m^3/h	665
Rotation speed at 50hz	-	3500
Sound pressure level LpA at 3 m	dB(A)	46
Weight	kg	6
Transported air temperature (max)	°C	50
Transported air temperature (min)	°C	-25
Ingress protection rating	-	IPX4
Ingress protection rating of the drive	-	IP54
Impeller material	-	Plastic

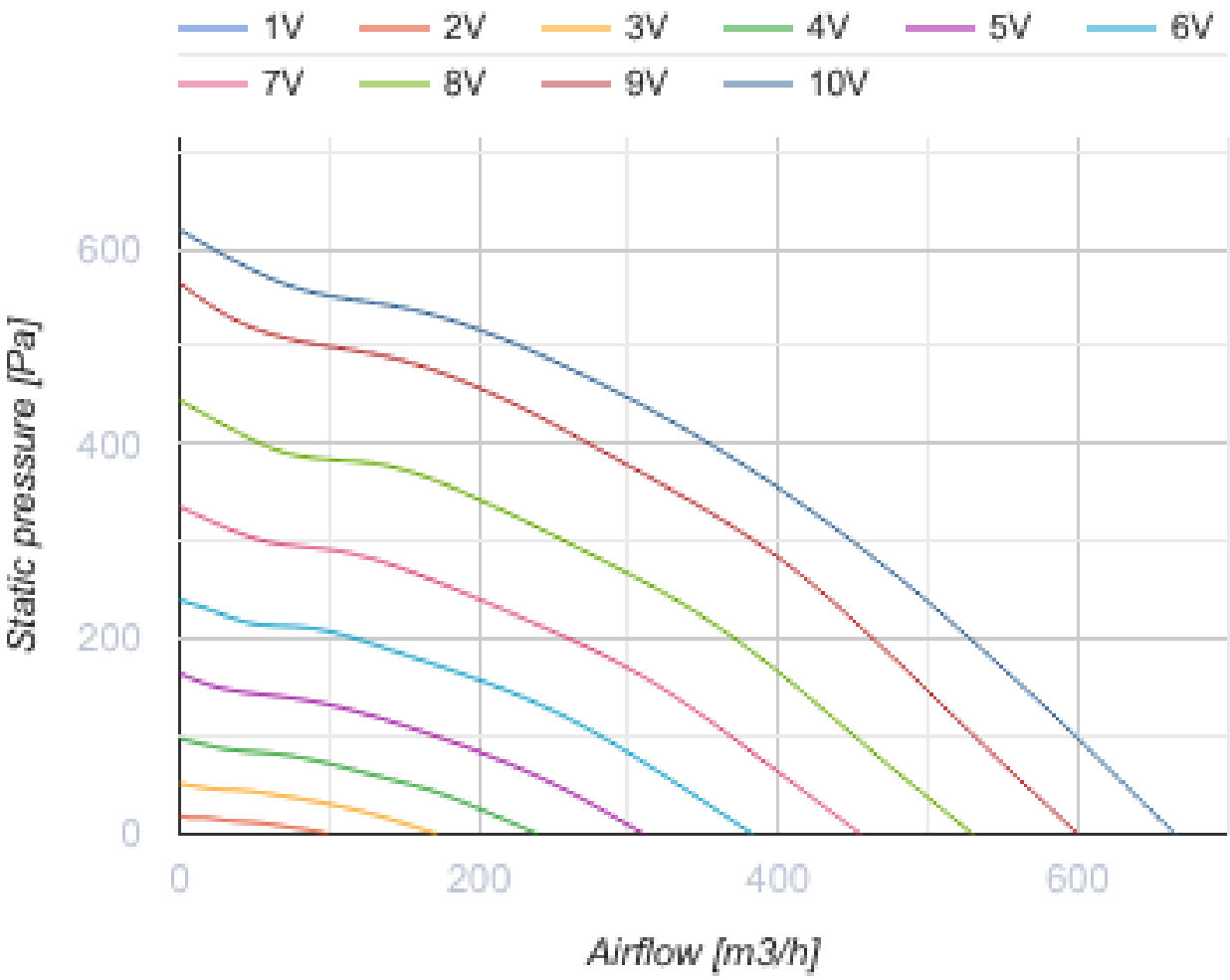
1V
2V
3V
4V
5V
6V
7V
8V
9V
10V
600
400
200
0
Static pressure [Pa]
0
200
400
600
Airflow [m3/h]

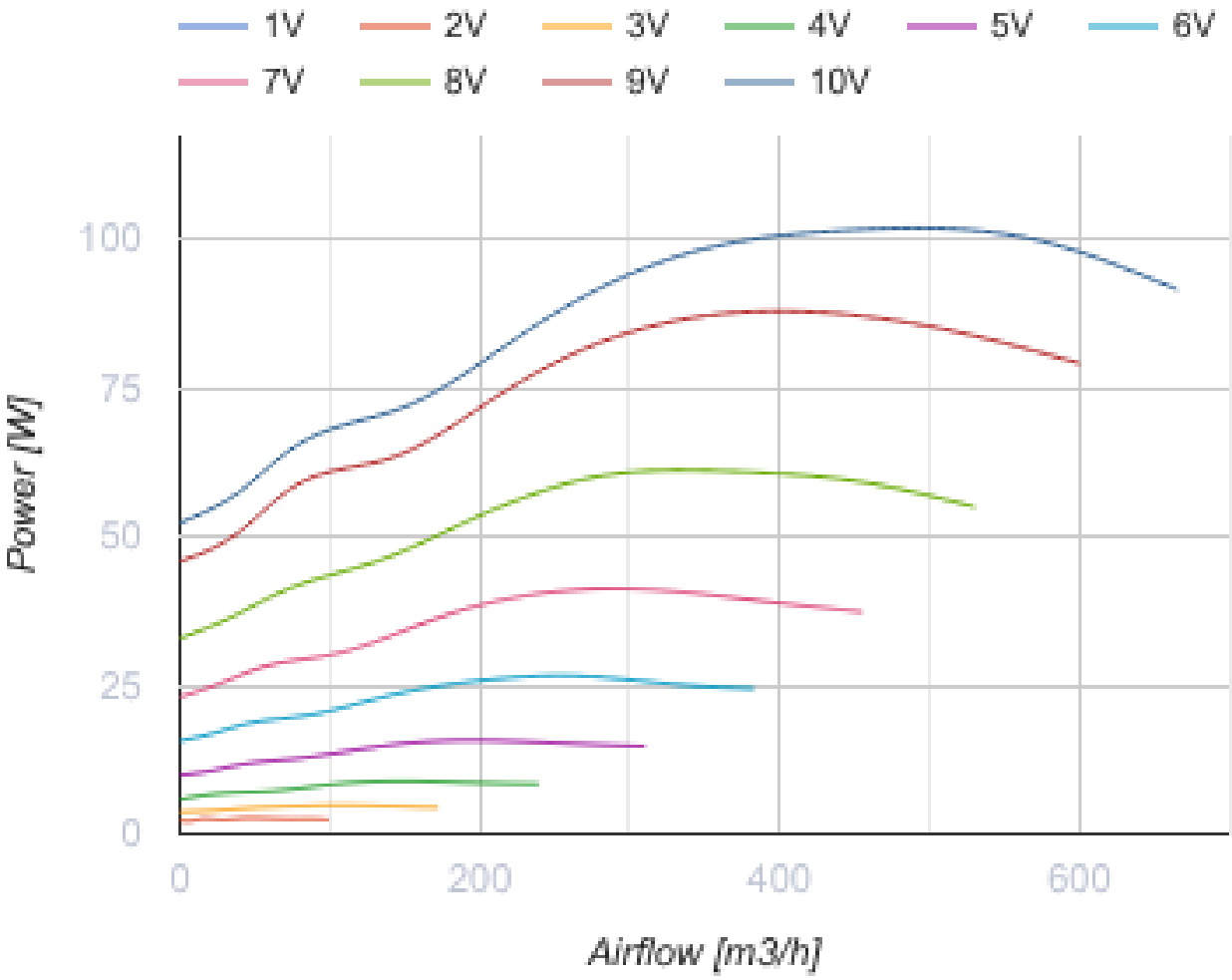

Dimensions

B	B1	B2	H	H1	H2	H3	L
300	320	340	150	170	190	228	350

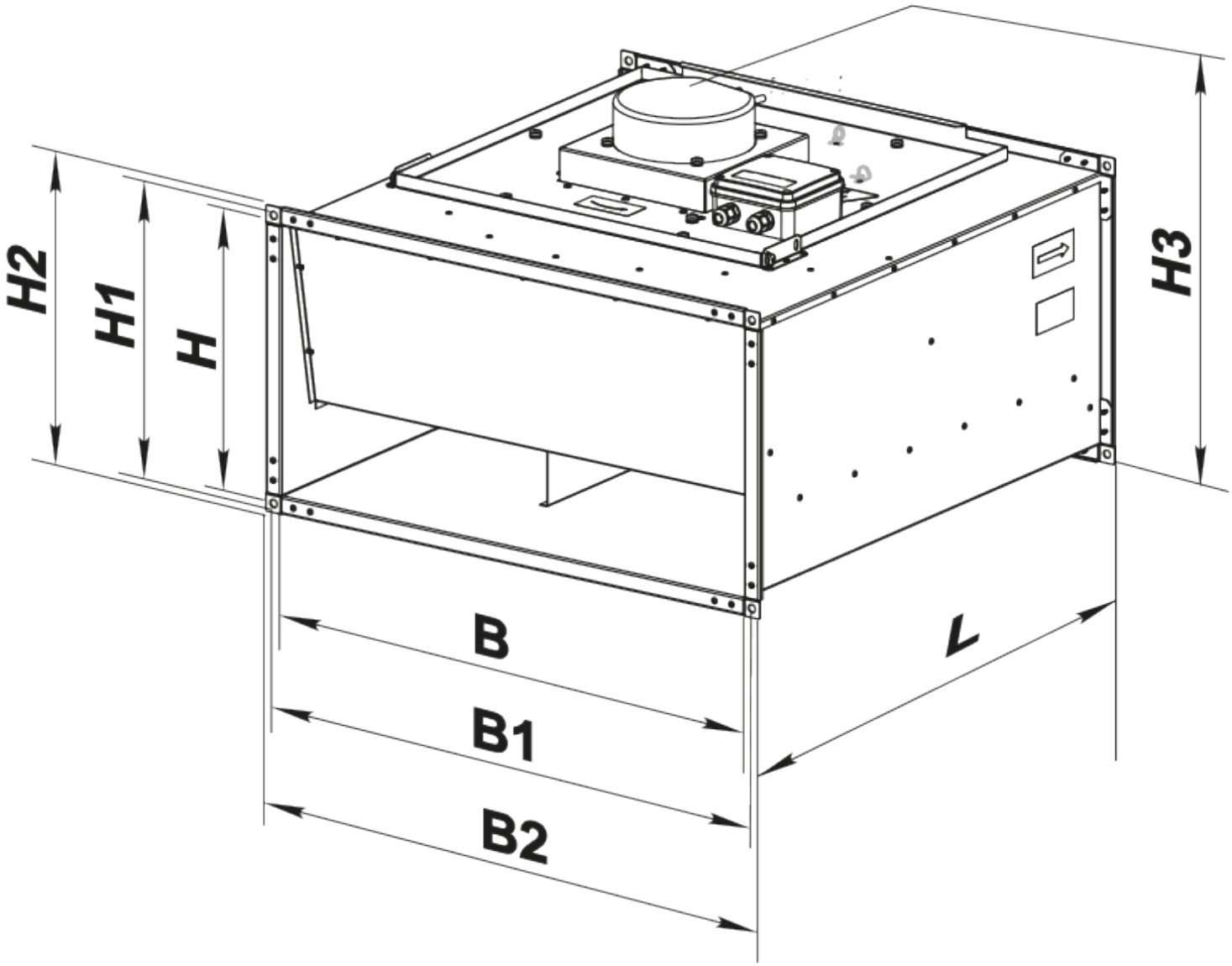

Accessories

For rectangular ducts

Name	Photo	Description

VVG 300x150		Flexible anti-vibration inserts for round air ducts

Ecodesign

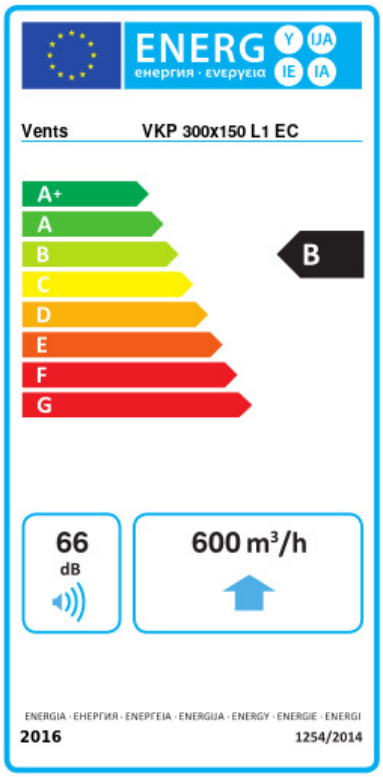

Trademark	Vents					
Model	VKP 300x150 L1 EC					
Specific energy consumption (SEC) (kWh/(m²/a))	Cold		Average		Warm	
	-54.1	A+	-27.1	B	-11.6	E
Type of ventilation unit	Unidirectional					
Type of drive installed	Variable speed					
Type of heat recovery system	None					
Maximum flow rate (m³/h)	600					
Electric power input (W)	99					
Reference flow rate (m³/s)	0.117					
Reference pressure difference (Pa)	50					
Specific power input (SPI) (W/(m³/h))	0.092					
Control typology	Local demand control					
Maximum external leakage rates (%)	2.7					
Declared typology	RVU UVU					
Sound power level (dB(A))	66					
The annual electricity consumption (AEC) (kWh/a)	Cold		Average		Warm	
	49		49		49	
The annual heating saved (AHS) (kWh/a)	Cold		Average		Warm	
	5536		2830		1280	