VKP 2E 400x200



Centrifugal inline fans with backward curved blades

• Sound pressure level LpA at 3 m: 50
• Impeller type: Centrifugal impeller with backward curved blades
• Casing material: Galvanized steel
• Installation in any position

	Unit of measurement	VKP 2E 400x200
Connected air duct size	mm	400x200
Phases	-	1
Minimum supply voltage	V	220
Maximum supply voltage	V	240
Power supply frequency	Hz	50/60
Rated power	W	138
Unit current	A	0.6
Maximum airflow	m^3/h	930
Rotation speed at 50hz	-	2600
Sound pressure level LpA at 3 m	dB(A)	50
Weight	kg	11.25
Transported air temperature (max)	°C	45
Transported air temperature (min)	°C	-25
Ingress protection rating	-	IPX4
Ingress protection rating of the drive	-	IP44
Impeller material	-	Plastic

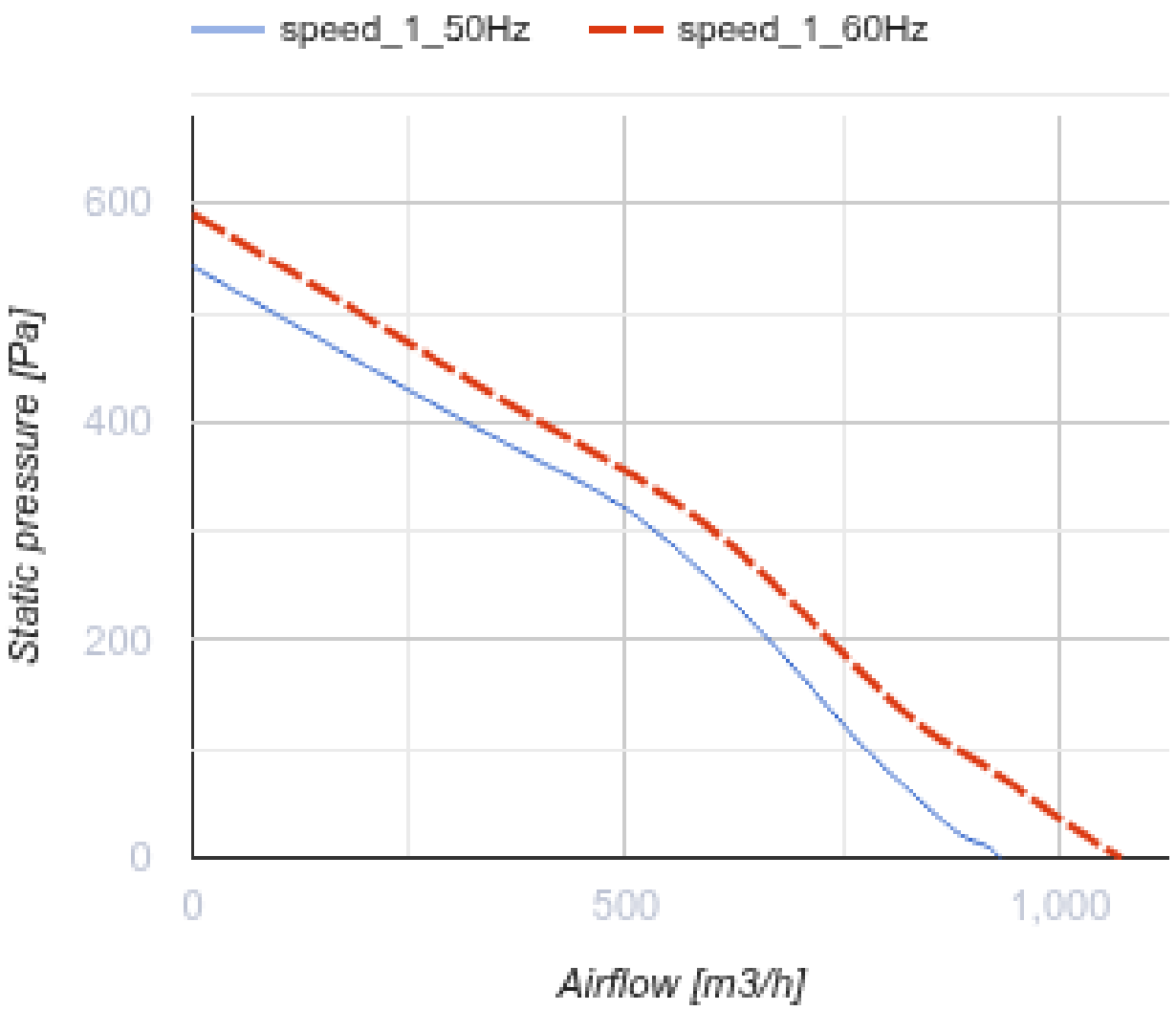
speed_1_50Hz
speed_1_60Hz
600
400
200
0
Static pressure [Pa]
0
500
1,000
Airflow [m3/h]

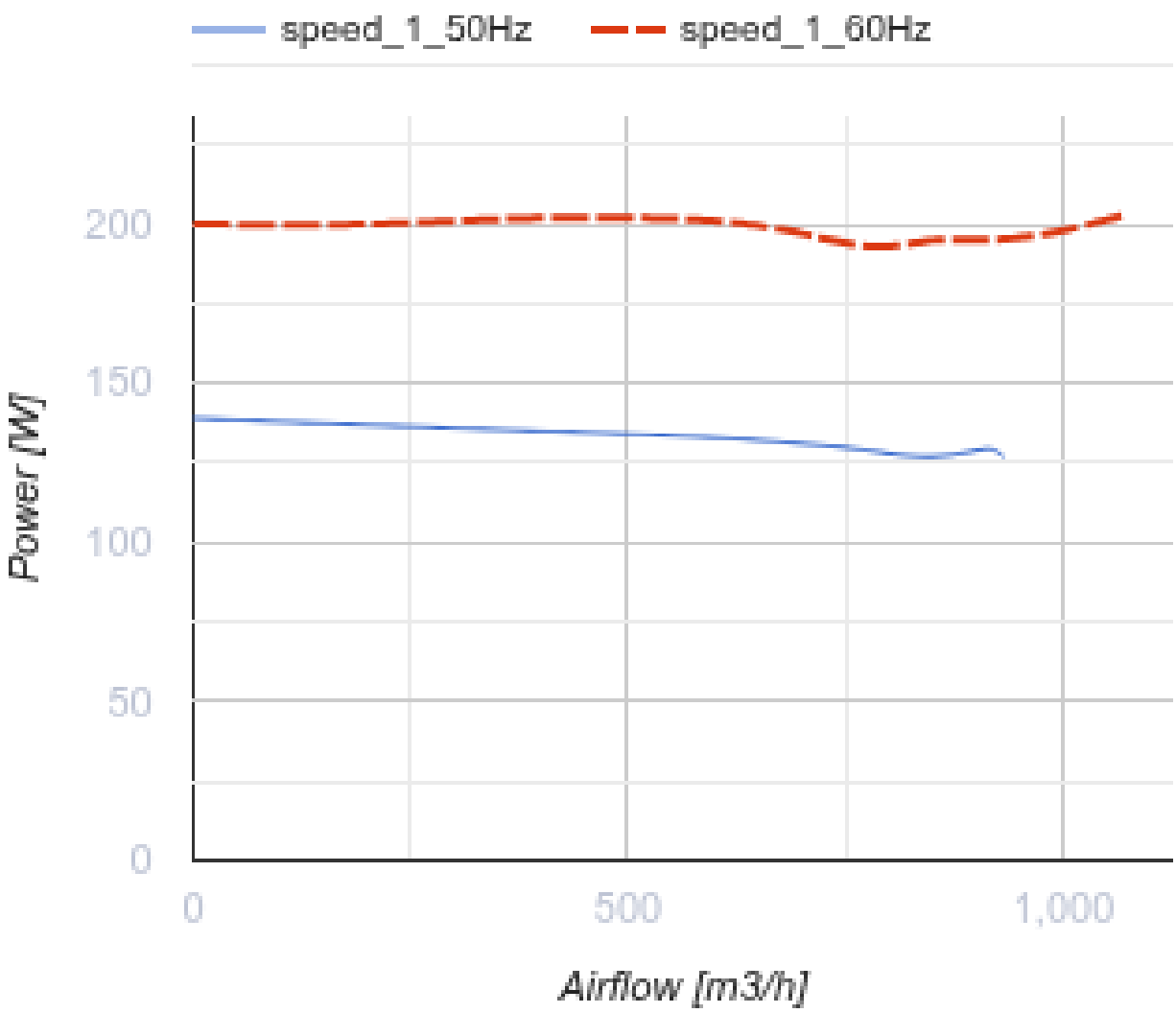

Dimensions

B	B1	B2	H	H1	H2	H3	L
400	420	440	200	220	240	240	500

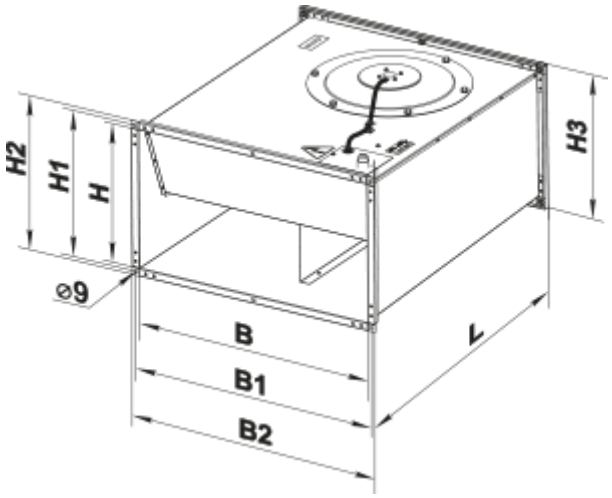

Accessories

For rectangular ducts

Name	Photo	Description
SR 400x200		Plate silencer for installation in rectangular ducts

For rectangular ducts

Name	Photo	Description
FB 400x200		Rectangular panel air filters
FBK 400x200-4		Rectangular bag air filters
FBK 400x200-5		Rectangular bag air filters
FBK 400x200-7		Rectangular bag air filters

For rectangular ducts

Name	Photo	Description
KOM1 400x200		Backdraught gravity dampe for shutting off air flow in rectangular air ducts
KR 400x200		Air dampers for controlling air flow in rectangular air ducts

For rectangular ducts

Name	Photo	Description
VVG 400x200		Flexible anti-vibration inserts for round air ducts

Water heaters

Name	Photo	Description
NKV 400x200-2		Inline water supply air heaters or heater for air handling units with a rectangular cross-section
NKV 400x200-4		Inline water supply air heaters or heater for air handling units with a rectangular cross-section

Electrical heaters

Name	Photo	Description
NK 400x200-4,5-3		Rectangular electric inline heaters
NK 400x200-6,0-3		Rectangular electric inline heaters
NK 400x200-7,5-3		Rectangular electric inline heaters
NK 400x200-9,0-3		Rectangular electric inline heaters
NK 400x200-10,5-3		Rectangular electric inline heaters
NK 400x200-12,0-3		Rectangular electric inline heaters
NK 400x200-15,0-3		Rectangular electric inline heaters

Water coolers

Name	Photo	Description
OKW 400x200-3		Rectangular inline water coolers

Airflow regulators

Name	Photo	Description
RRV 400x200		Air flow controllers

Freon coolers

Name	Photo	Description
OKF 400x200-3		Rectangular inline direct evaporative coolers

Ecodesign

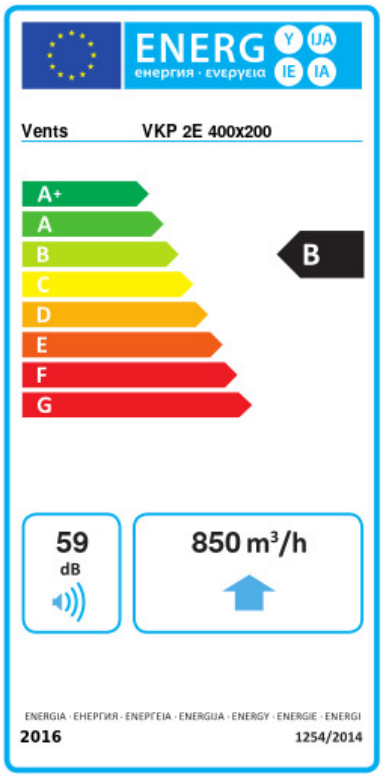

Trademark	Vents					
Model	VKP 2E 400x200					
Specific energy consumption (SEC) (kWh/(m²/a))	Cold		Average		Warm	
	-53.7	A+	-26.6	B	-11.1	E
Type of ventilation unit	Unidirectional					
Type of drive installed	Multi-speed					
Type of heat recovery system	None					
Maximum flow rate (m³/h)	850					
Electric power input (W)	138					
Reference flow rate (m³/s)	0.165					
Reference pressure difference (Pa)	50					
Specific power input (SPI) (W/(m³/h))	0.128					
Control typology	Local demand control					
Maximum external leakage rates (%)	2.7					
Declared typology	RVU UVU					
Sound power level (dB(A))	59					
The annual electricity consumption (AEC) (kWh/a)	Cold		Average		Warm	
	68		68		68	
The annual heating saved (AHS) (kWh/a)	Cold		Average		Warm	
	5536		2830		1280	