VKP 200 mini Duo



Centrifugal inline fans

• Sound pressure level LpA at 3 m: 48
• Impeller type: Centrifugal impeller with forward curved blades
• Casing material: Coated steel
• Installation in any position

	Unit of measurement	VKP 200 mini Duo	
Speed	-	1	2
Connected air duct size	mm	200	
Phases	-	1	
Minimum supply voltage	V	230	
Maximum supply voltage	V	230	
Power supply frequency	Hz	50	
Rated power	W	103	142
Unit current	A	0.45	0.63
Maximum airflow	m³/h	770	1200
Rotation speed at 50hz	-	770	1200
Sound pressure level LpA at 3 m	dB(A)	46	48
Weight	kg	8.8	
Transported air temperature (max)	°C	50	
Ingress protection rating	-	IPX4	
Ingress protection rating of the drive	-	IP44	
Impeller material	-	Plastic	

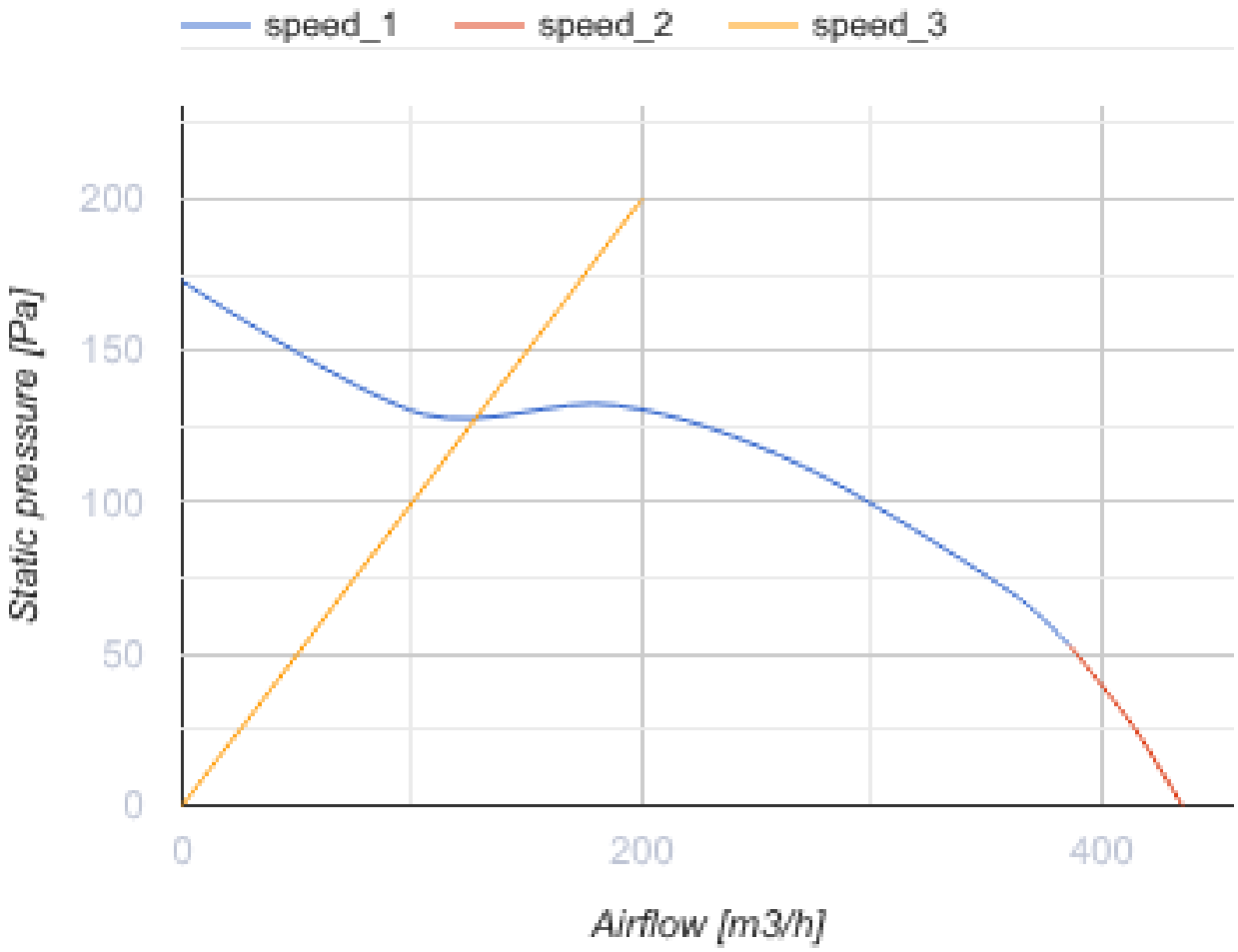

Dimensions

ØD	ØD1	B	H	L	L2
198	198	362	222	494	397

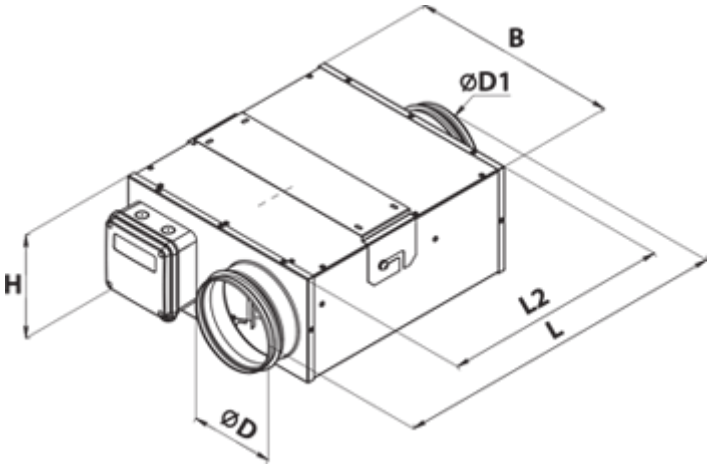

Ecodesign

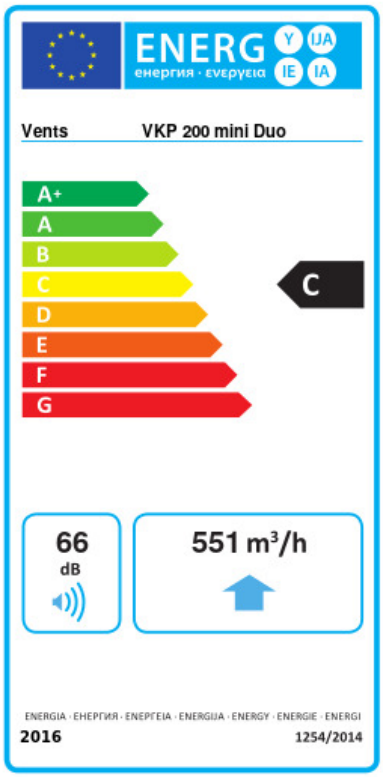

Trademark	Vents					
Model	VKP 200 mini Duo					
Specific energy consumption (SEC) (kWh/(m²/a))	Cold		Average		Warm	
	-51.8	A+	-24.8	C	-9.3	F
Type of ventilation unit	Unidirectional					
Type of drive installed	Variable speed					
Type of heat recovery system	None					
Maximum flow rate (m³/h)	551					
Electric power input (W)	123					
Reference flow rate (m³/s)	0.107					
Reference pressure difference (Pa)	50					
Specific power input (SPI) (W/(m³/h))	0.267					
Control typology	Local demand control					
Maximum external leakage rates (%)	2.7					
Declared typology	RVU UVU					
Sound power level (dB(A))	66					
The annual electricity consumption (AEC) (kWh/a)	Cold		Average		Warm	
	141		141		141	
The annual heating saved (AHS) (kWh/a)	Cold		Average		Warm	
	5536		2830		1280	