# VKP 1000x500 L3 EC

Centrifugal inline fans with backward curved blades with EC-motors

- Sound pressure level LpA at 3 m: 66
- Impeller type: Centrifugal impeller with backward curved blades
- Casing material: Galvanized steel
- Installation in any position

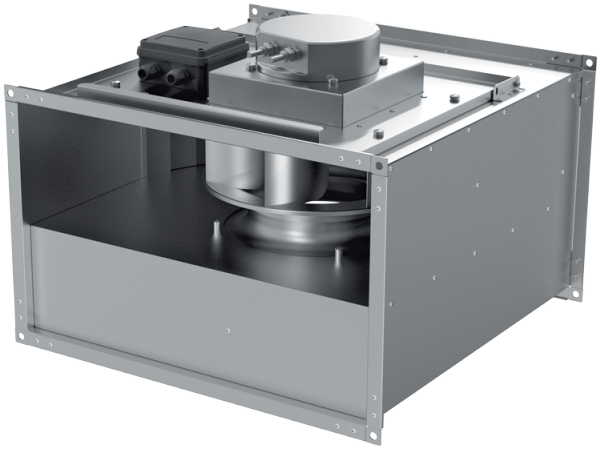

| | Unit of measurement | VKP 1000x500 L3 EC |
|---|---|---|
| Connected air duct size | mm | 1000x500 |
| Phases | - | 3 |
| Minimum supply voltage | V | 400 |
| Maximum supply voltage | V | 400 |
| Power supply frequency | Hz | 50/60 |
| Rated power | W | 3429 |
| Unit current | A | 5 |
| Maximum airflow | m³/h | 11190 |
| Rotation speed at 50hz | - | 1800 |
| Sound pressure level LpA at 3 m | dB(A) | 66 |
| Weight | kg | 77 |
| Transported air temperature (max) | °C | 50 |
| Transported air temperature (min) | °C | -25 |
| Ingress protection rating | - | IPX4 |
| Ingress protection rating of the drive | - | IP54 |
| Impeller material | - | Aluminium |

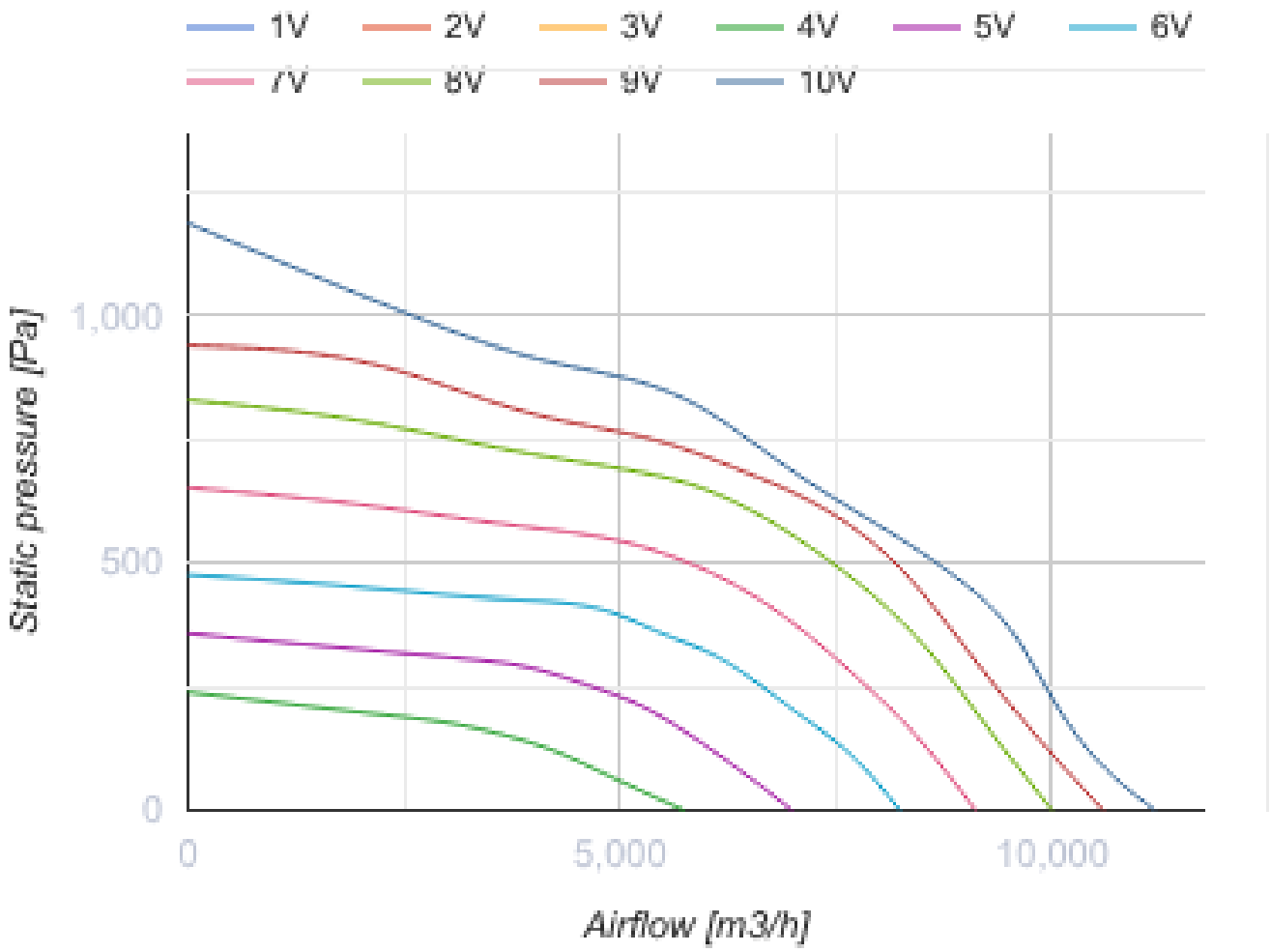
1V
2V
3V
4V
5V
6V
7V
8V
9V
10V
Static pressure [Pa]
1,000
500
0
0
5,000
10,000
Airflow [m3/h]

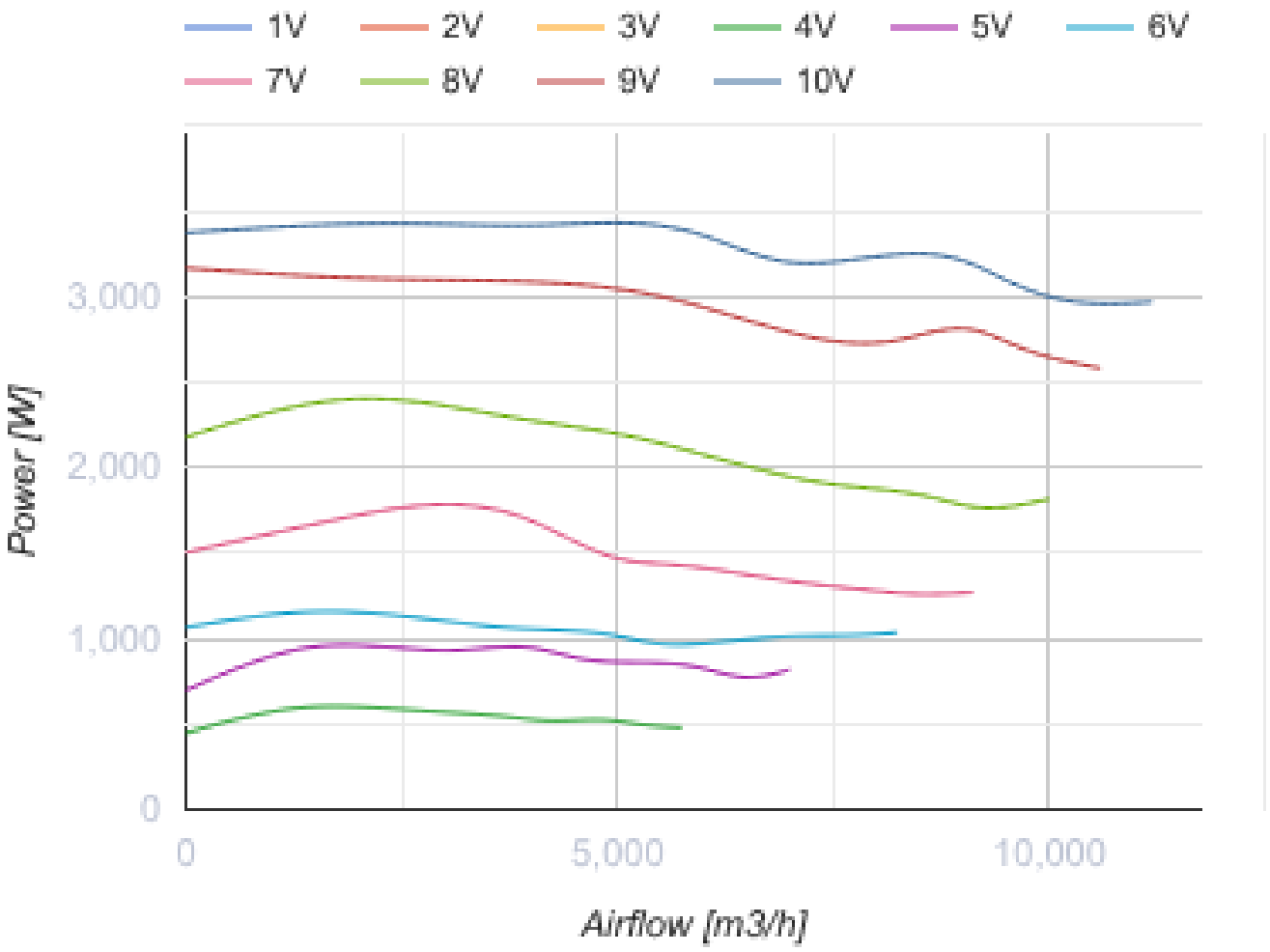


## Dimensions

| B | B1 | B2 | H | H1 | H2 | H3 | L |
|---|---|---|---|---|---|---|---|
| 1000 | 1020 | 1040 | 500 | 520 | 540 | 656 | 950 |

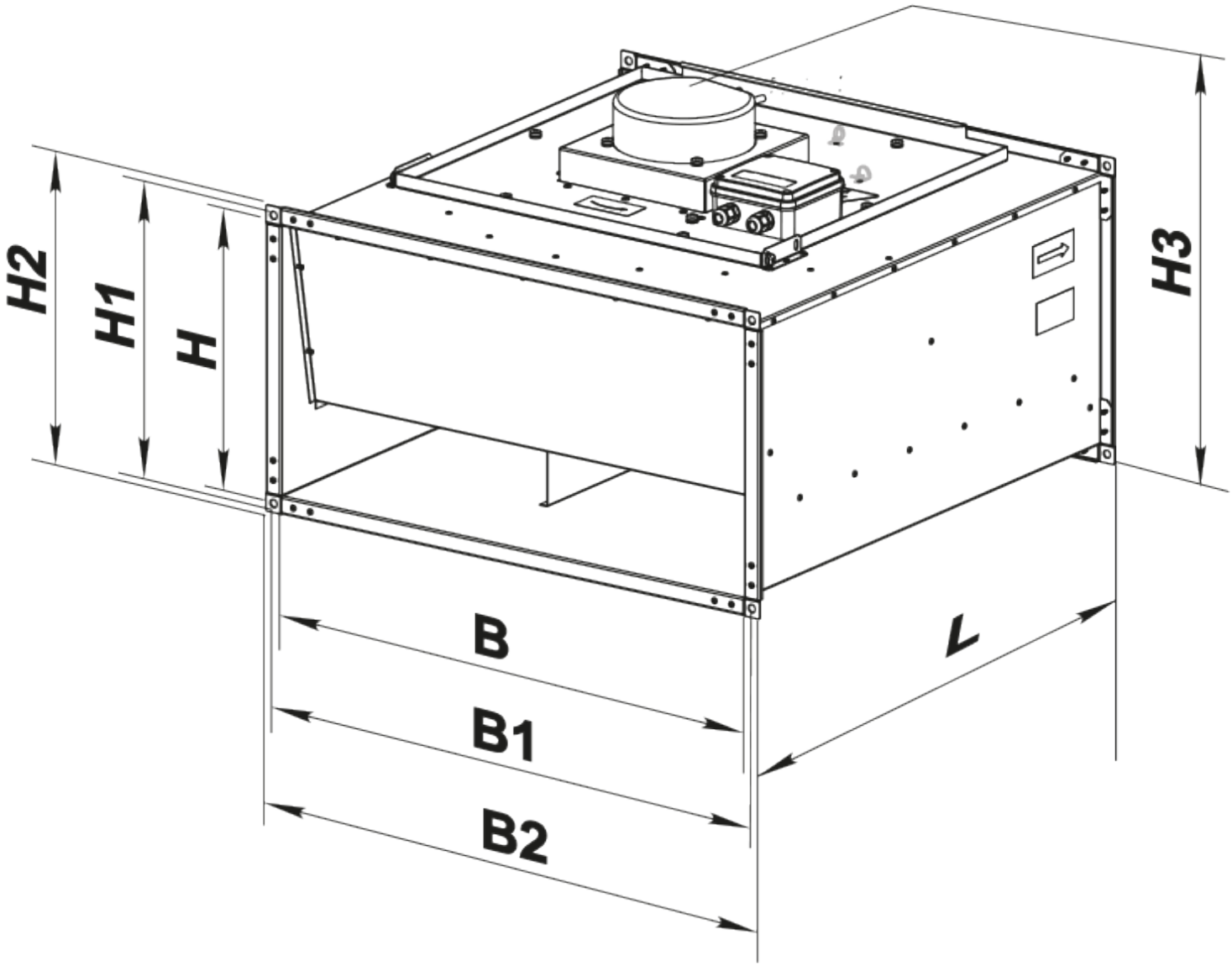


## Accessories

### For rectangular ducts

| Name | Photo | Description |
|---|---|---|

| | | |
|---|---|---|
| SR 1000x500 | 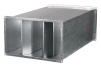 | Plate silencer for installation in rectangular ducts |

### For rectangular ducts

| Name | Photo | Description |
|---|---|---|
| FB 1000x500 |  | Rectangular panel air filters |
| FBK 1000x500-4 |  | Rectangular bag air filters |
| FBK 1000x500-5 |  | Rectangular bag air filters |
| FBK 1000x500-7 |  | Rectangular bag air filters |

### For rectangular ducts

| Name | Photo | Description |
|---|---|---|
| VVG 1000x500 |  | Flexible anti-vibration inserts for round air ducts |

### Water heaters

| Name | Photo | Description |
|---|---|---|
| NKV 1000x500-2 |  | Inline water supply air heaters or heater for air handling units with a rectangular cross-section |
| NKV 1000x500-3 |  | Inline water supply air heaters or heater for air handling units with a rectangular cross-section |

### Electrical heaters

| Name | Photo | Description |
|---|---|---|
| NK 1000x500-45,0-3 |  | Rectangular electric inline heaters |
| NK 1000x500-54,0-3 |  | Rectangular electric inline heaters |

### Airflow regulators

| Name | Photo | Description |
|---|---|---|
| RRV 1000x500 |  | Air flow controllers |

### Water coolers

| Name | Photo | Description |
|---|---|---|
| OKW 1000x500-3 |  | Rectangular inline water coolers |

### Freon coolers

| Name | Photo | Description |
|---|---|---|
| OKF 1000x500-3 |  | Rectangular inline direct evaporative coolers |

## Ecodesign

| Trademark | Vents |
|---|---|
| Model | VKP 1000x500 L3 EC |
| Type of drive installed | Integrated VSD |
| Type of heat recovery system | None |
| Nominal external pressure (Pa) | 362 |
| Maximum external leakage rates (%) | 2.7 |
| Static efficiency (%) | 62.3 |
| Declared typology | NRVU UVU |
| Effective electric power input (kW) | 0.974 |
| Sound power level (dB(A)) | 86 |