VKP 100/100*5 mini X3

Centrifugal inline fans

• Sound pressure level LpA at 3 m: 44
• Impeller type: Centrifugal impeller with forward curved blades
• Casing material: Coated steel
• Installation in any position



	Unit of measurement	VKP 100/100*5 mini X3		
Speed	-	1	2	3
Connected air duct size	mm	100		
Phases	-	1		
Minimum supply voltage	V	230		
Maximum supply voltage	V	230		
Power supply frequency	Hz	50		
Rated power	W	20	26	45
Unit current	A	0.32	0.34	0.4
Maximum airflow	m³/h	97	138	176
Rotation speed at 50hz	-	1400	1800	2600
Sound pressure level LpA at 3 m	dB(A)	33	36	44
Weight	kg	3.37		
Transported air temperature (max)	°C	50		
Ingress protection rating	-	IPX4		
Ingress protection rating of the drive	-	IP44		
Impeller material	-	Plastic		

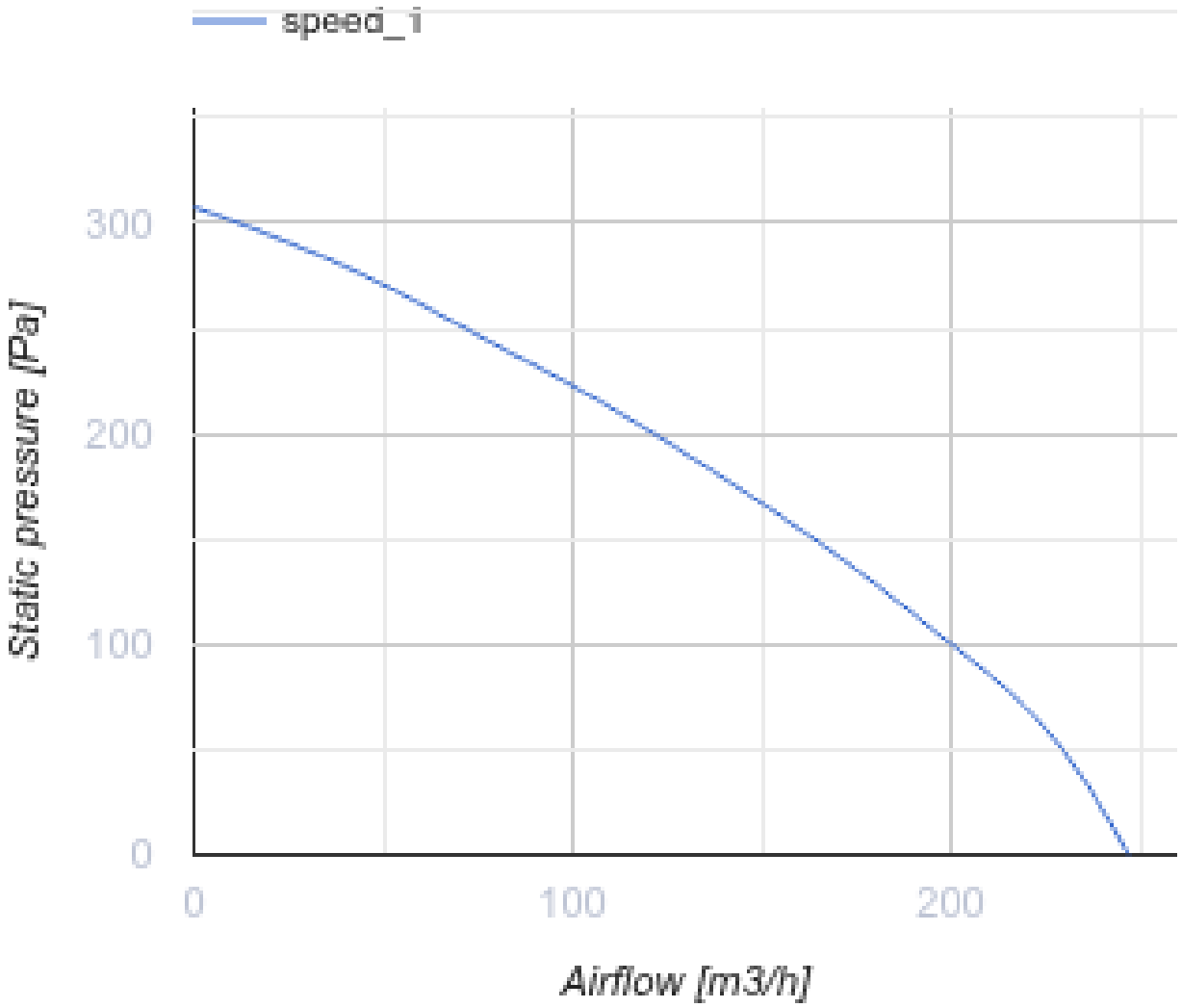
speed_1
300
200
100
0
Static pressure [Pa]
0
100
200
Airflow [m3/h]

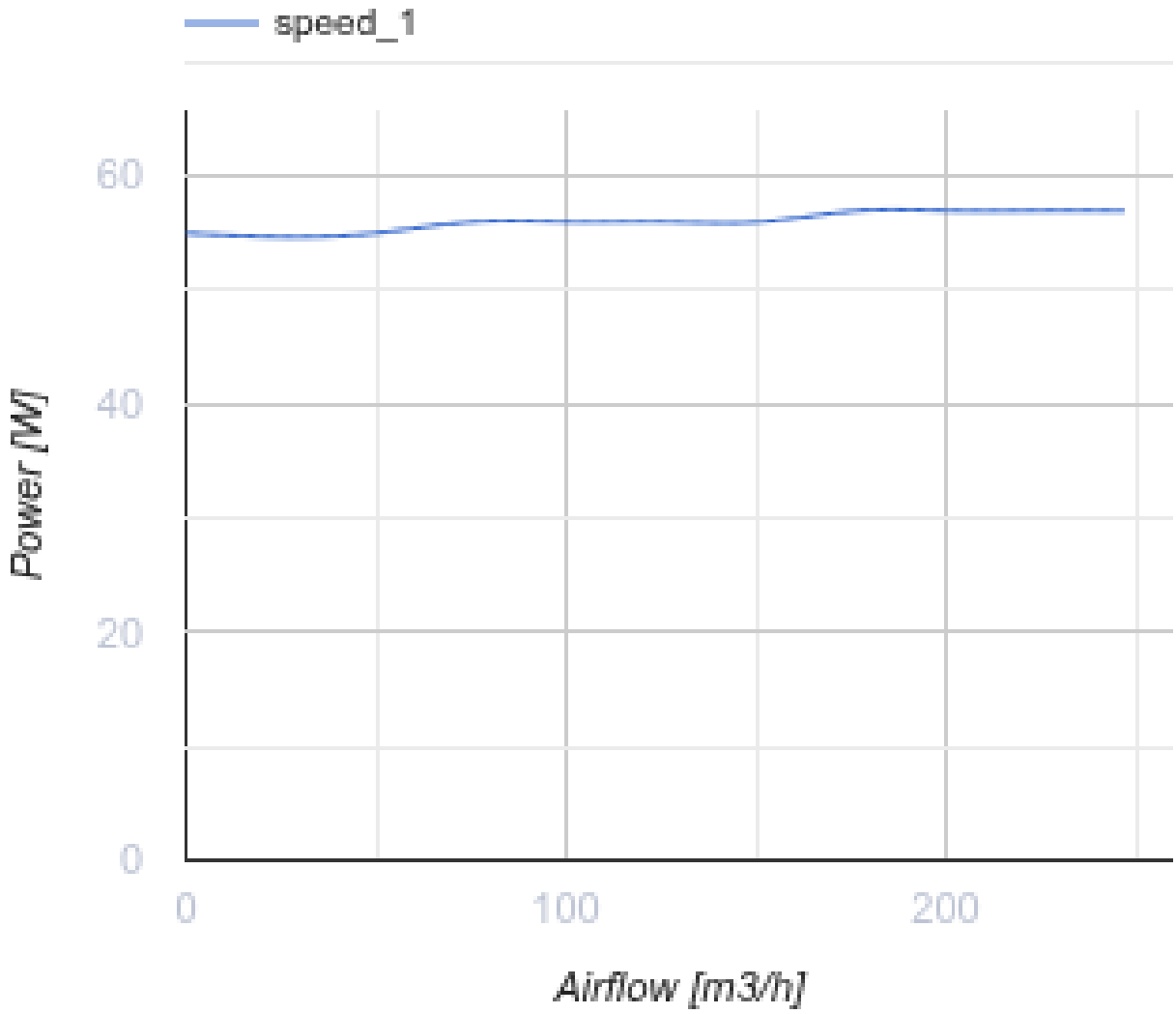

Dimensions

ØD	ØD1	B	H	H1	L	L2
99	99	252	110	166	351	253

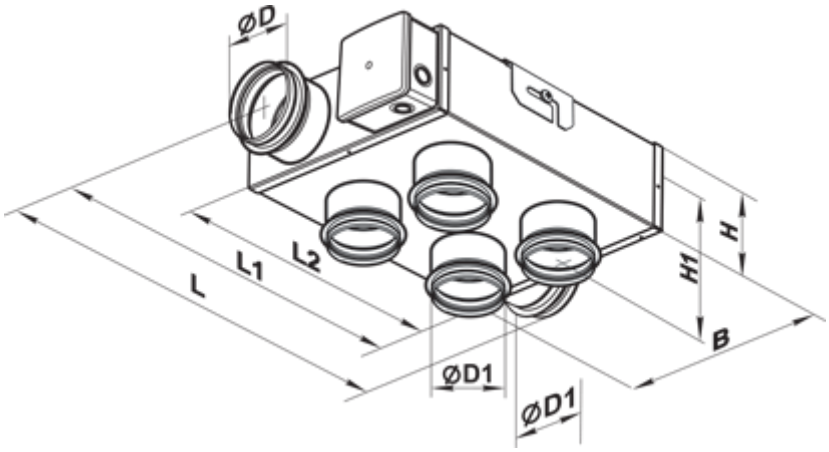
ØD
L
L1
L2
H
H1
B
ØD1
ØD1