VKOM 200

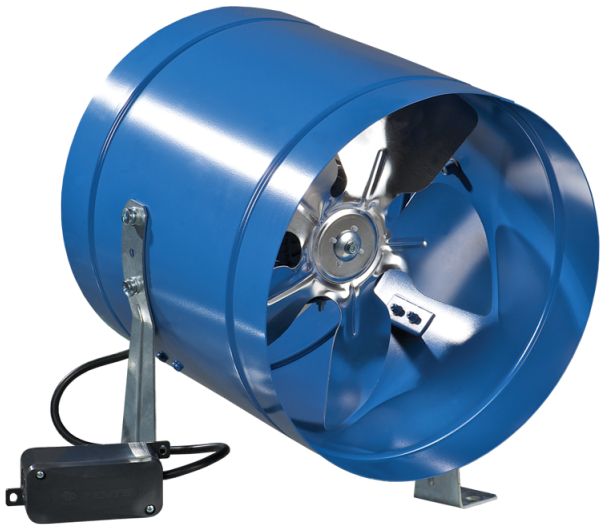

Inline axial fans

- Sound pressure level LpA at 3 m: 33
- Impeller type: Axial
- Casing material: Coated steel
- Installation in any position

	Unit of measurement	VKOM 200	
Connected air duct size	mm	200	
Phases	-	1	
Maximum supply voltage	V	240	
Minimum supply voltage	V	220	
Power supply frequency	Hz	50	60
Rated power	W	33	
Unit current	A	0.23	
Maximum airflow	m^3/h	390	
Rotation speed at 50hz	-	1300	
Sound pressure level LpA at 3 m	dB(A)	33	
Weight	kg	2.4	
Transported air temperature (max)	°C	40	
Transported air temperature (min)	°C	-30	
Ingress protection rating	-	IPX4	
Ingress protection rating of the drive	-	IP44	
Impeller material	-	Aluminium	

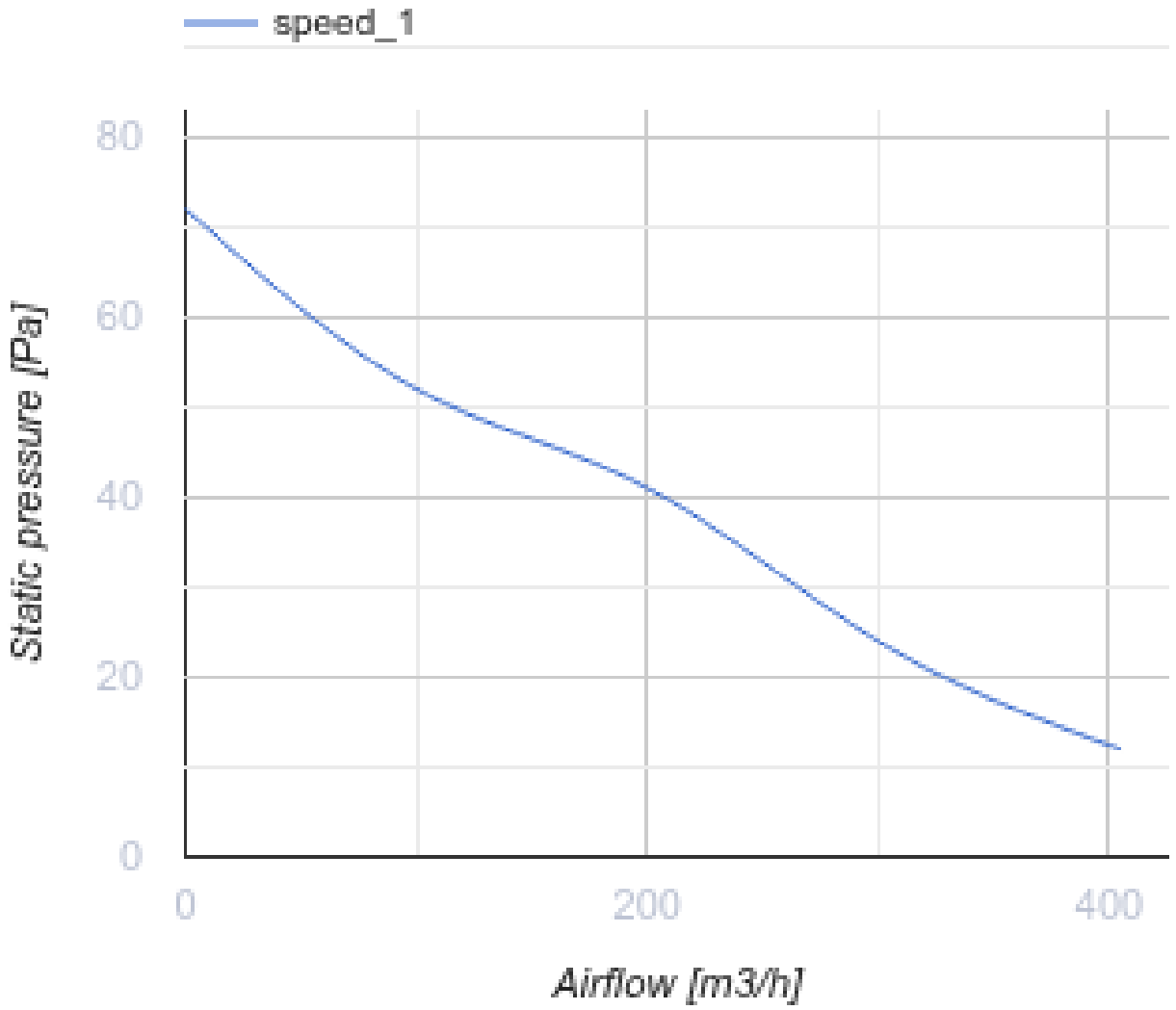
speed_1
80
60
40
20
0
Static pressure [Pa]
0
200
400
Airflow [m3/h]

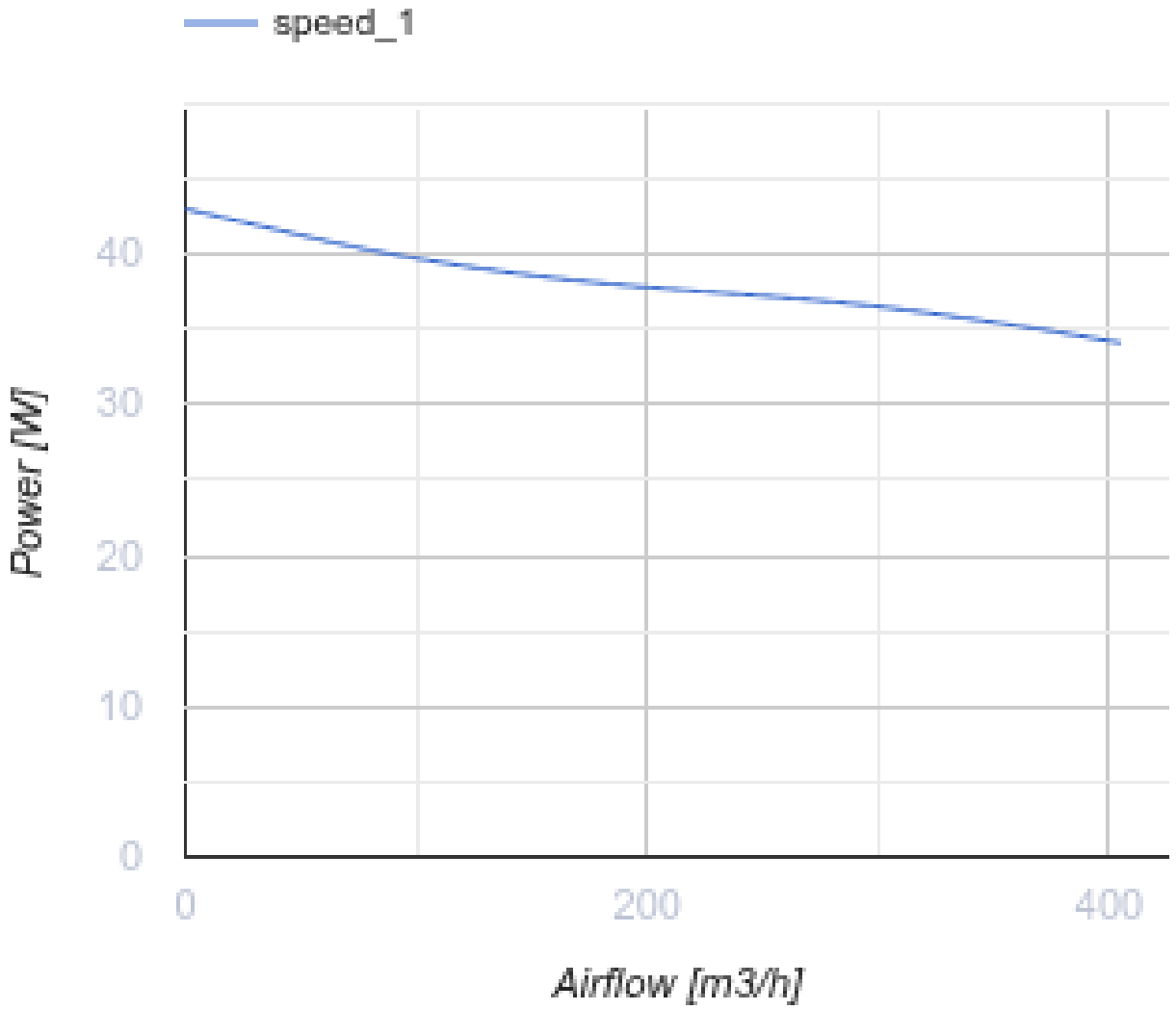

Dimensions

ØD	B	L	L1	L3
208	228	220	40	30

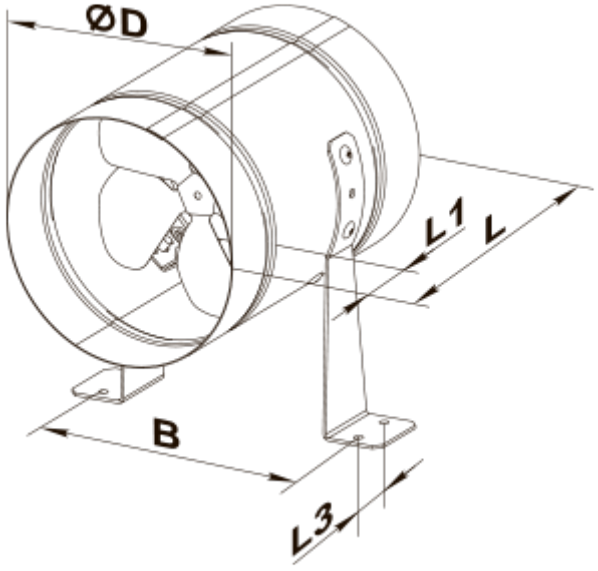
ØD
L1
L
B
L3

Ecodesign

Trademark	Vents
Model	VKOM 200
Type of drive installed	External MSD or VSD
Type of heat recovery system	None
Nominal external pressure (Pa)	42
Maximum external leakage rates (%)	2.7
Static efficiency (%)	8.6
Sound power level (dB(A))	52
Effective electric power input (kW)	0.027
Declared typology	NRVU UVU