VKMz 250 EC



Inline centrifugal fans in galvanized casing with EC-motors

• Sound pressure level LpA at 3 m: 49
• Impeller type: Centrifugal impeller with backward curved blades
• Casing material: Galvanized steel
• Installation in any position

	Unit of measurement	VKMz 250 EC
Connected air duct size	mm	250
Phases	-	1
Maximum supply voltage	V	230
Minimum supply voltage	V	230
Power supply frequency	Hz	50/60
Rated power	W	161
Unit current	A	1.25
Maximum airflow	m³/h	1300
Rotation speed at 50hz	-	3820
Sound pressure level LpA at 3 m	dB(A)	49
Weight	kg	4.5
Transported air temperature (max)	°C	60
Transported air temperature (min)	°C	-25
Ingress protection rating	-	IPX4
Impeller material	-	Plastic

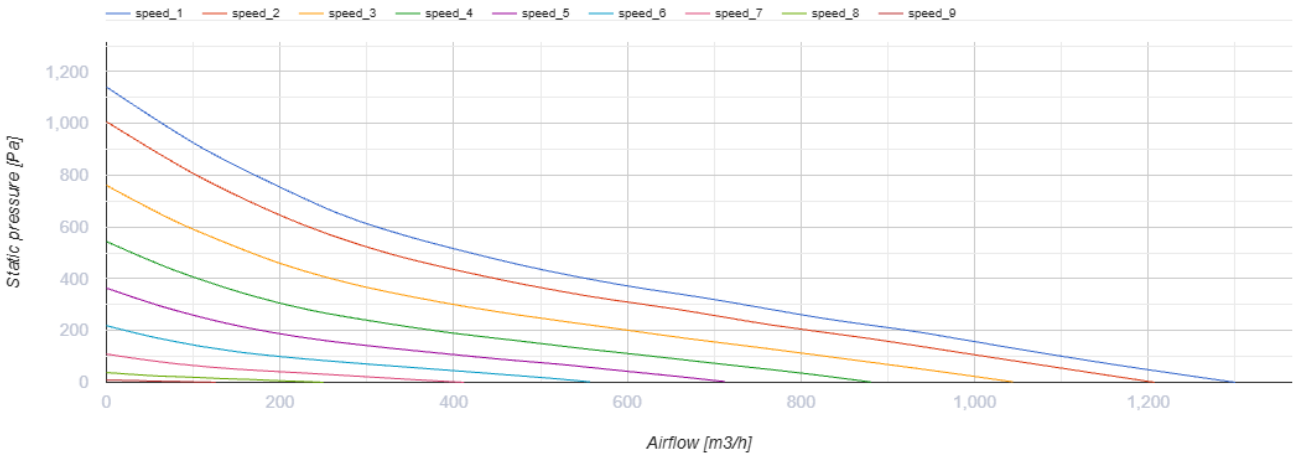

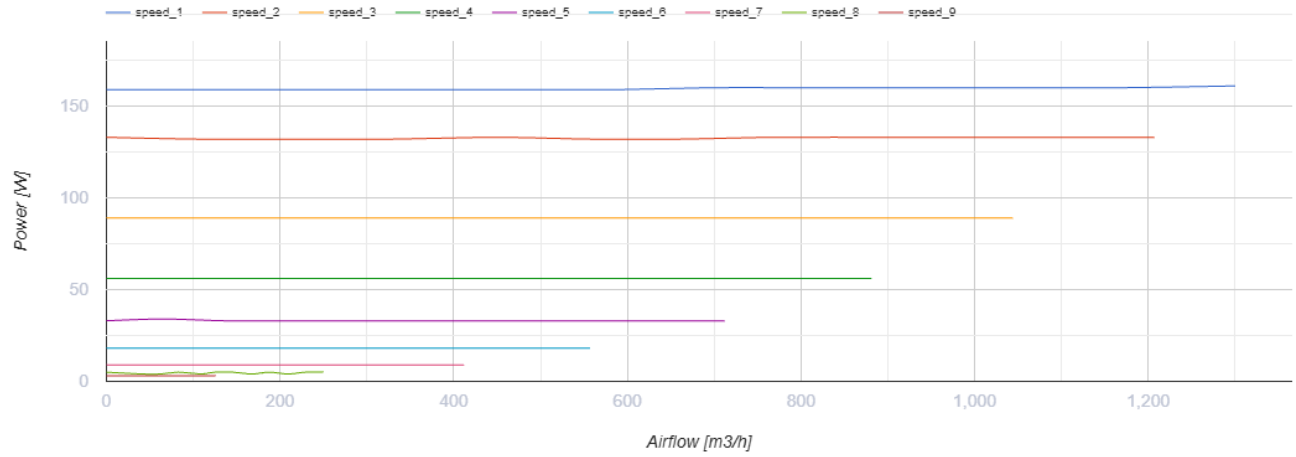

Dimensions

Ø D	Ø D1	H	L	L1	L2
248	345	400	245	25	30

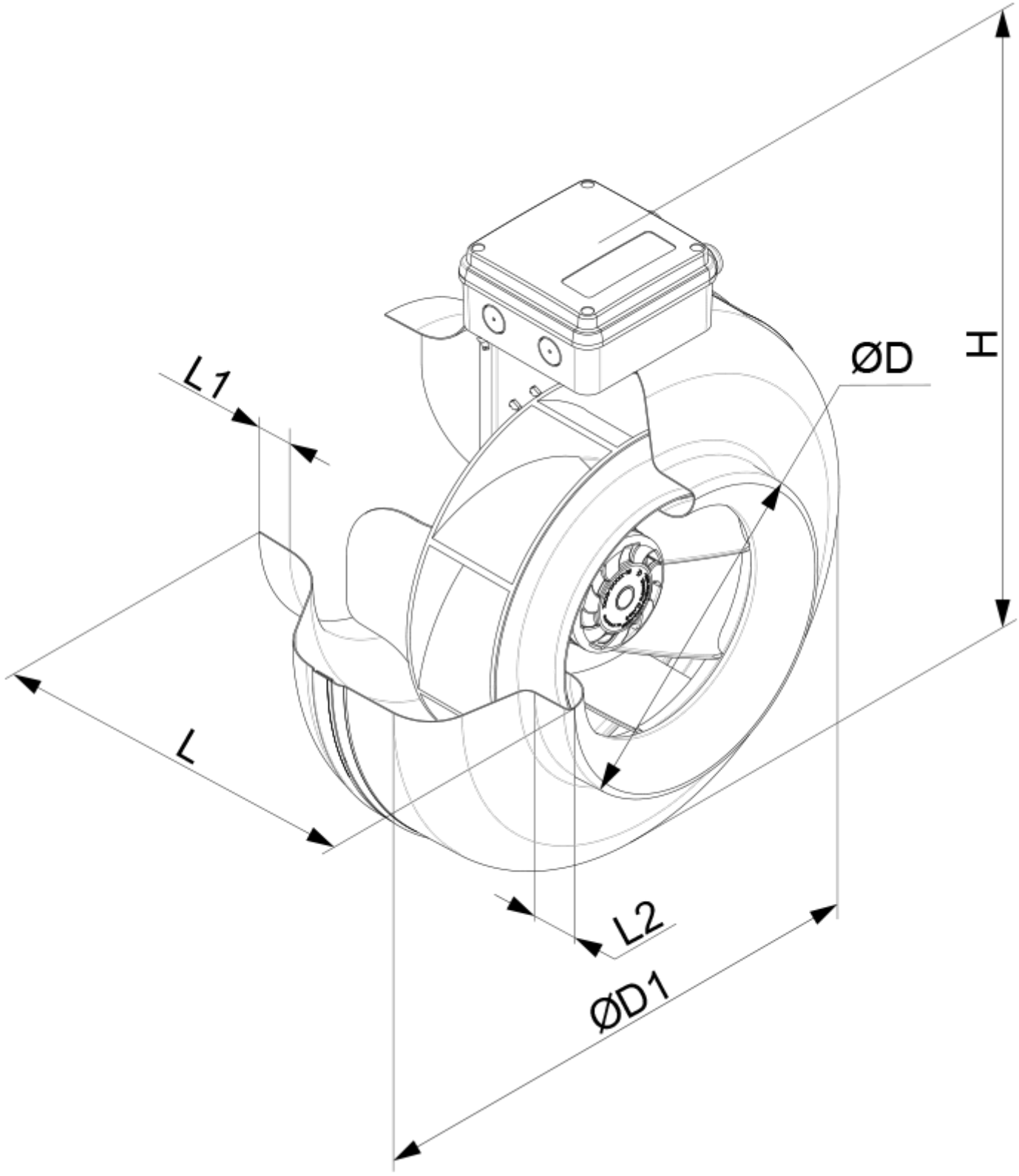

Accessories

Speed controllers

Name	Photo	Description

R-1/010		Speed controller for EC motors