VKMz 200 Q



Centrifugal inline fans in galvanized casing

• Sound pressure level LpA at 3 m: 48
• Impeller type: Centrifugal impeller with backward curved blades
• Casing material: Galvanized steel
• Installation in any position

	Unit of measurement	VKMz 200 Q	
Connected air duct size	mm	200	
Phases	-	1	
Minimum supply voltage	V	220	
Maximum supply voltage	V	240	
Power supply frequency	Hz	50	60
Rated power	W	130	
Unit current	A	0.56	
Maximum airflow	m³/h	900	
Rotation speed at 50hz	-	2814	
Sound pressure level LpA at 3 m	dB(A)	48	
Weight	kg	5.5	
Transported air temperature (max)	°C	50	
Transported air temperature (min)	°C	-25	
Ingress protection rating	-	IPX4	
Ingress protection rating of the drive	-	IP44	
Impeller material	-	Plastic	

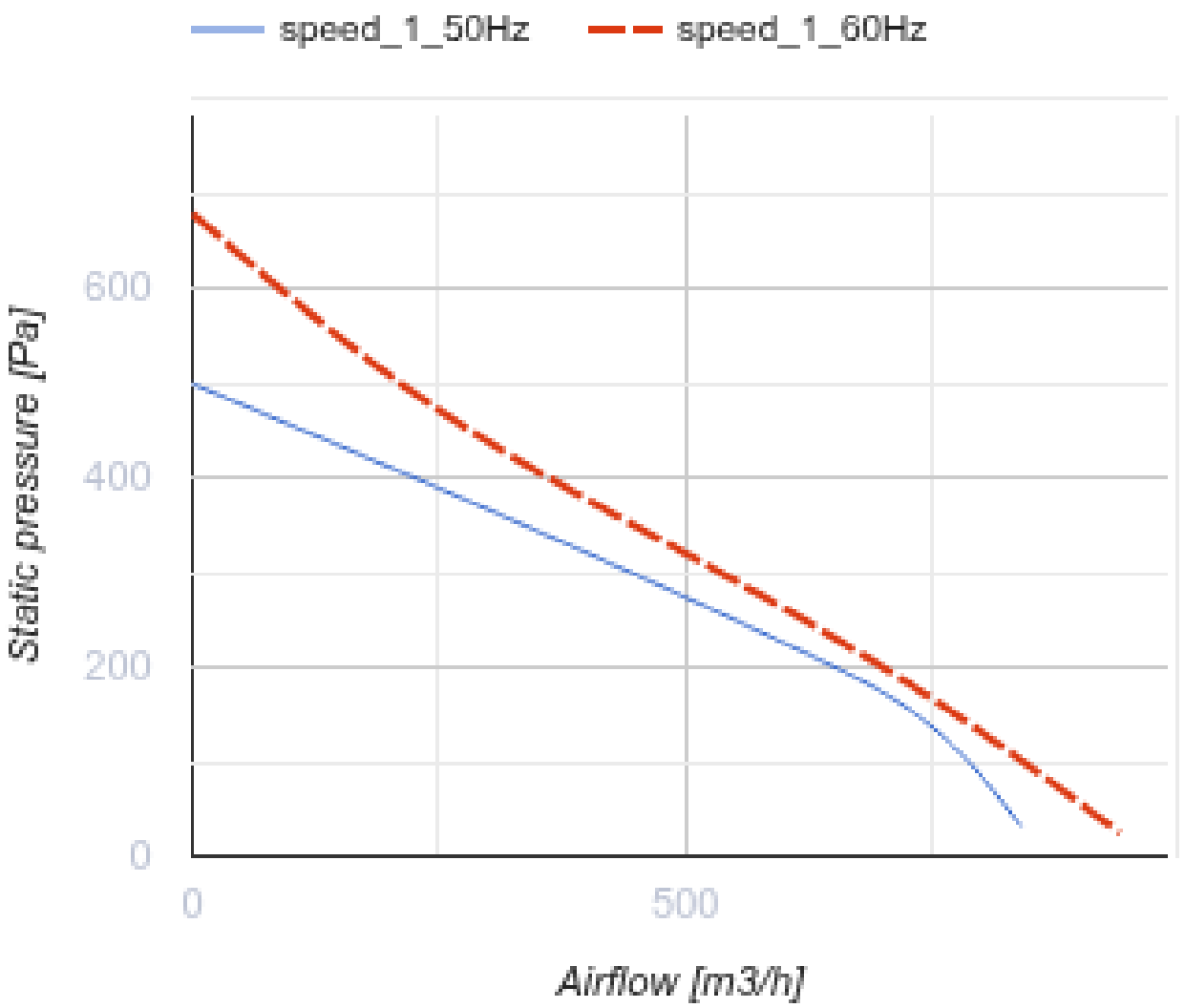
speed_1_50Hz
speed_1_60Hz
600
400
200
0
0
500
Static pressure [Pa]
Airflow [m3/h]

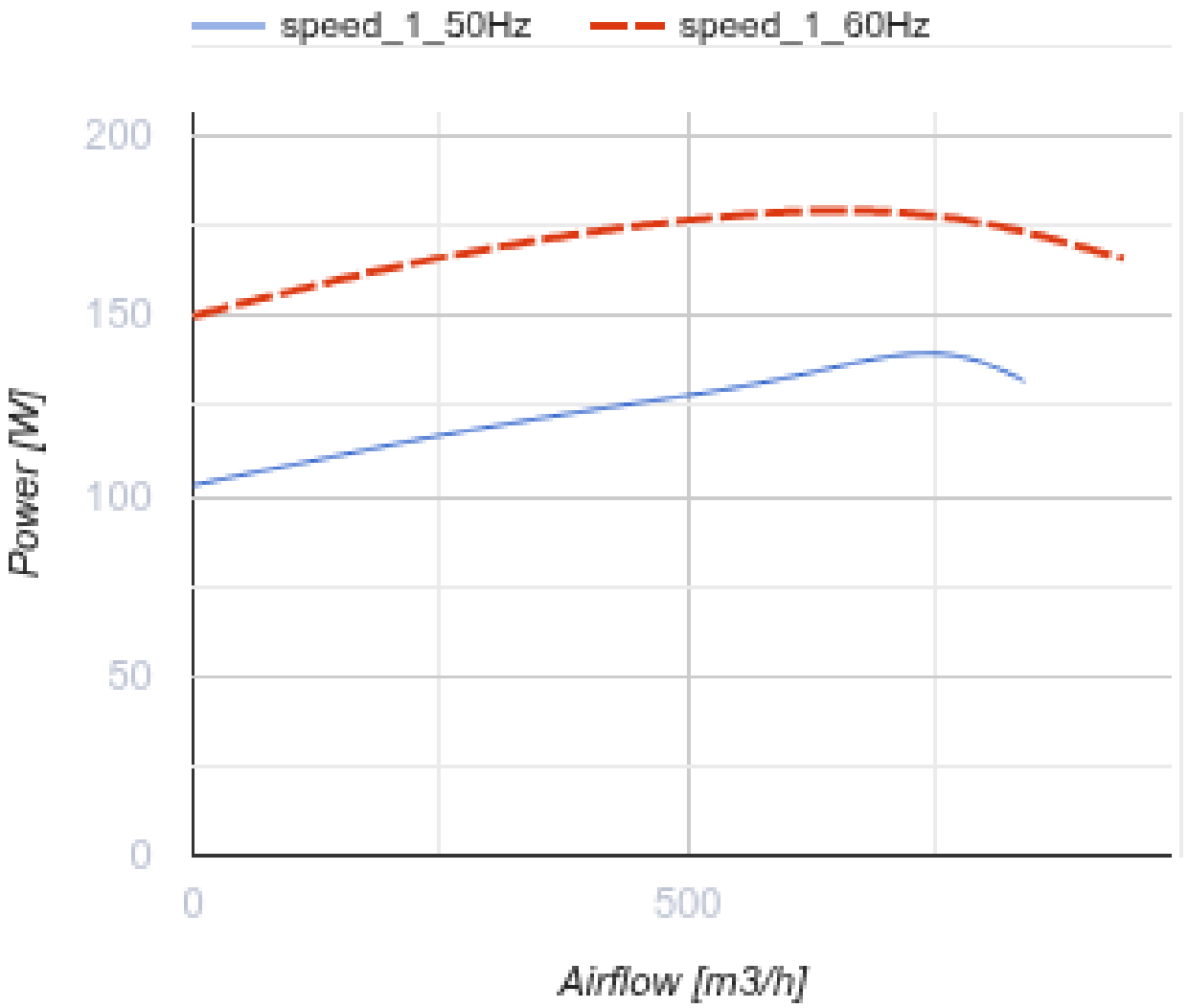

Dimensions

ØD	ØD1	B	B1	L	L1	L2	L3
198	332	340	380	245	25	29	40

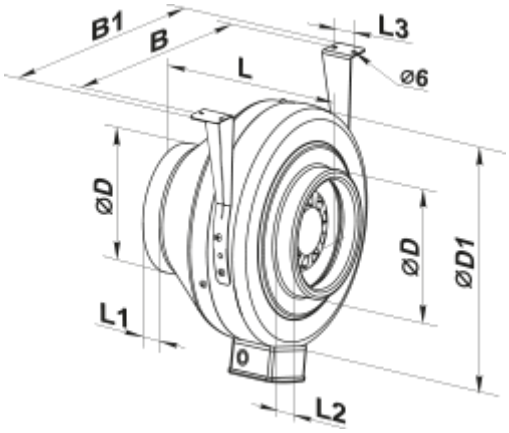

Ecodesign

Trademark	Vents
Model	VKMz 200 Q
Type of drive installed	Integrated VSD
Type of heat recovery system	None
Nominal external pressure (Pa)	308
Maximum external leakage rates (%)	2.7
Static efficiency (%)	33.6
Effective electric power input (kW)	0.128
Declared typology	NRVU UVU
Sound power level (dB(A))	69