VKMS 315 EC



Centrifugal inline fans with EC-motors

• Sound pressure level LpA at 3 m: 49
• Impeller type: Centrifugal impeller with backward curved blades
• Casing material: Coated steel
• Installation in any position

	Unit of measurement	VKMS 315 EC
Connected air duct size	mm	315
Phases	-	1
Minimum supply voltage	V	230
Maximum supply voltage	V	230
Power supply frequency	Hz	50/60
Rated power	W	183
Unit current	A	1.44
Maximum airflow	m^3/h	1820
Rotation speed at 50hz	-	2780
Sound pressure level LpA at 3 m	dB(A)	49
Weight	kg	9.4
Transported air temperature (max)	°C	60
Transported air temperature (min)	°C	-25
Ingress protection rating	-	IPX4
Ingress protection rating of the drive	-	IP44
Impeller material	-	Aluminium

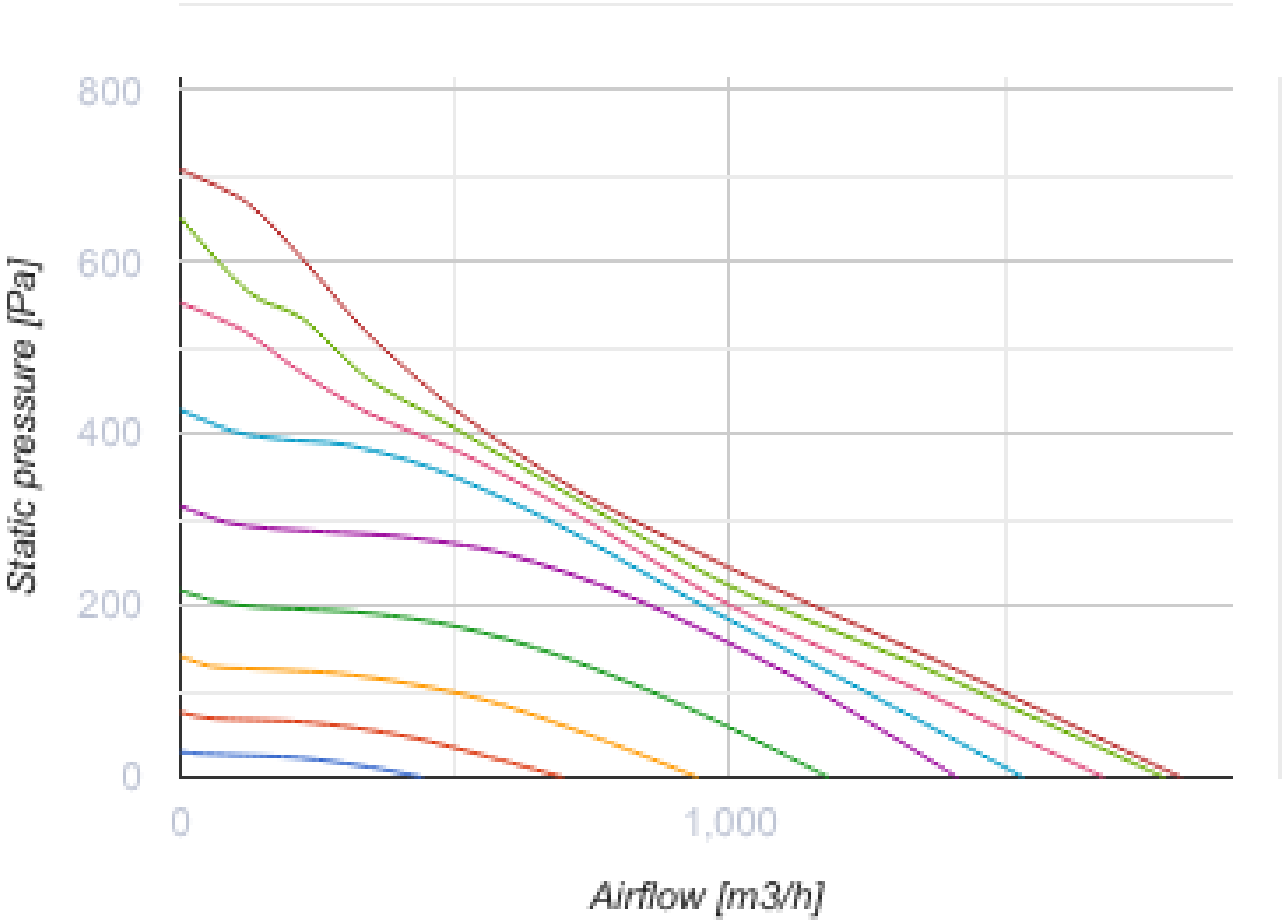
800
600
400
200
0
Static pressure [Pa]
0
1,000
Airflow [m3/h]

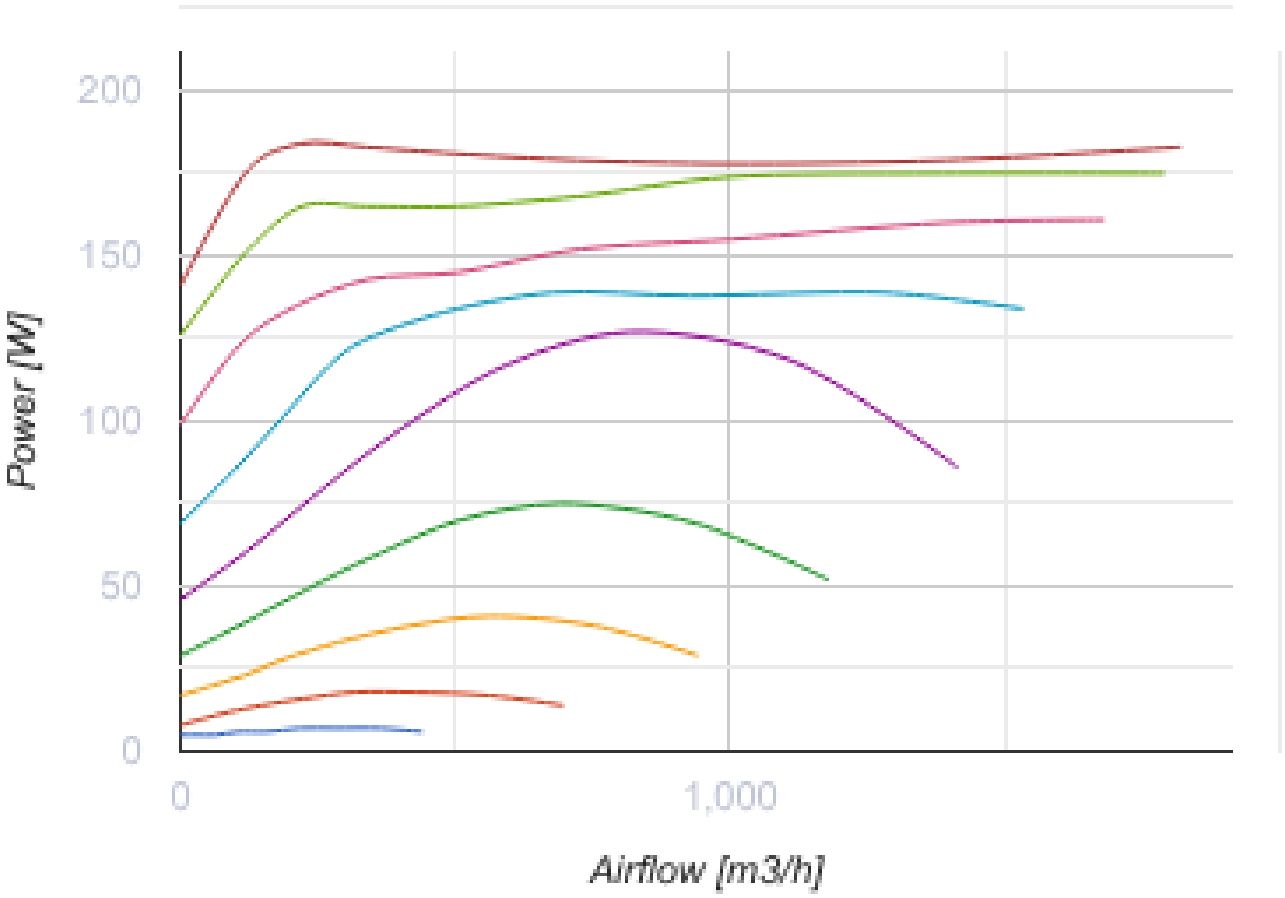

Dimensions

ØD	ØD1	B	B1	L	L1	L2	L3	ØD2
313	409	502	472	462	60	60	50	9

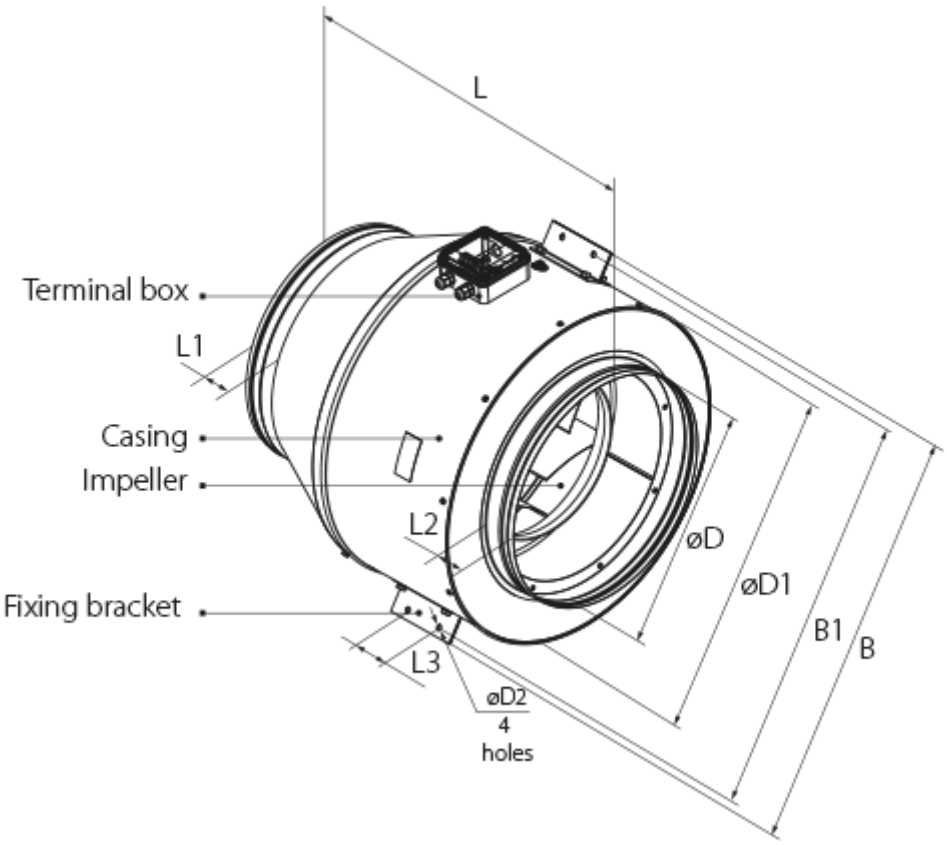
L
Terminal box
L1
Casing
Impeller
L2
Fixing bracket
L3
øD2
4
holes
øD
øD1
B1
B

Ecodesign

Trademark	Vents
Model	VKMS 315 EC
Type of drive installed	Integrated VSD
Type of heat recovery system	None
Nominal external pressure (Pa)	262
Maximum external leakage rates (%)	2.7
Static efficiency (%)	45
Declared typology	NRVU UVU
Effective electric power input (kW)	0.197
Sound power level (dB(A))	71