VKMK 200

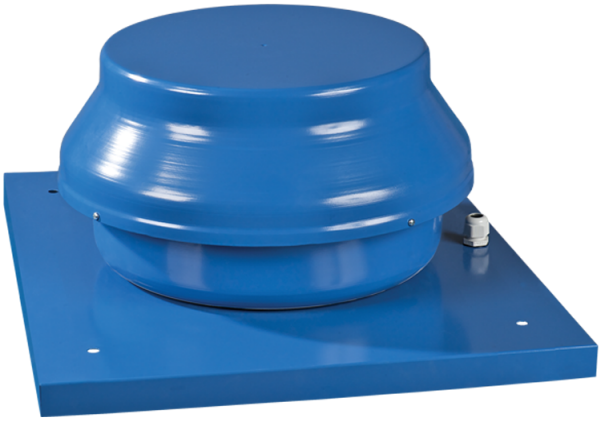

Roof centrifugal fans

• Sound pressure level LpA at 3 m: 48
• Impeller type: Centrifugal impeller with backward curved blades
• Casing material: Coated steel

	Unit of measurement	VKMK 200
Connected air duct size	mm	200
Phases	-	1
Minimum supply voltage	V	220
Maximum supply voltage	V	240
Power supply frequency	Hz	50/60
Rated power	W	154
Unit current	A	0.67
Maximum airflow	m^3/h	950
Rotation speed at 50hz	-	2375
Sound pressure level LpA at 3 m	dB(A)	48
Weight	kg	8.1
Transported air temperature (max)	°C	50
Transported air temperature (min)	°C	-25
Ingress protection rating	-	IPX4
Ingress protection rating of the drive	-	IP44
Impeller material	-	Plastic
Size	mm	200

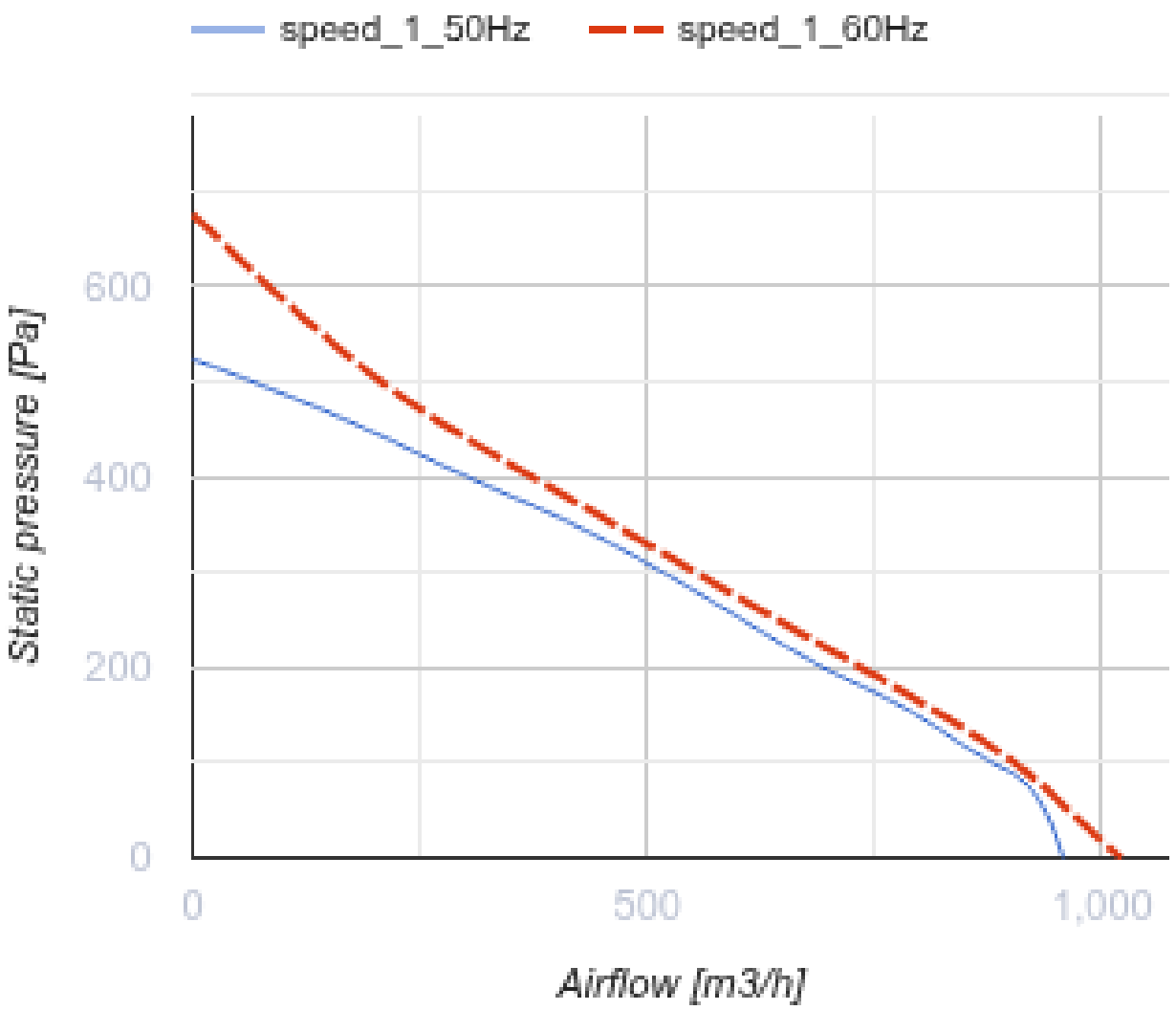
speed_1_50Hz
speed_1_60Hz
Static pressure [Pa]
600
400
200
0
0
500
1,000
Airflow [m3/h]

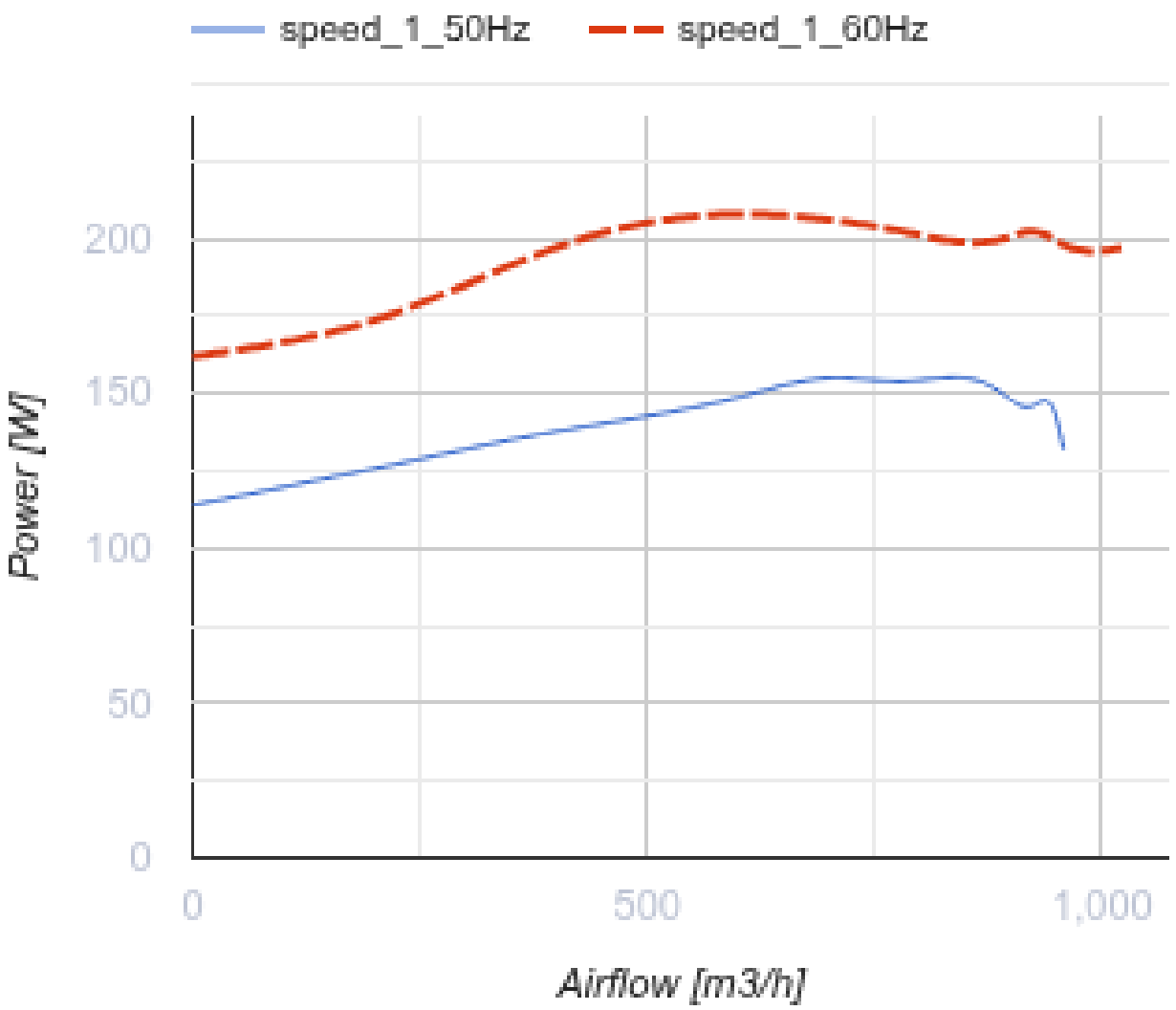

Dimensions

ØD	ØD1	H	L	L1
198	400	250	440	330

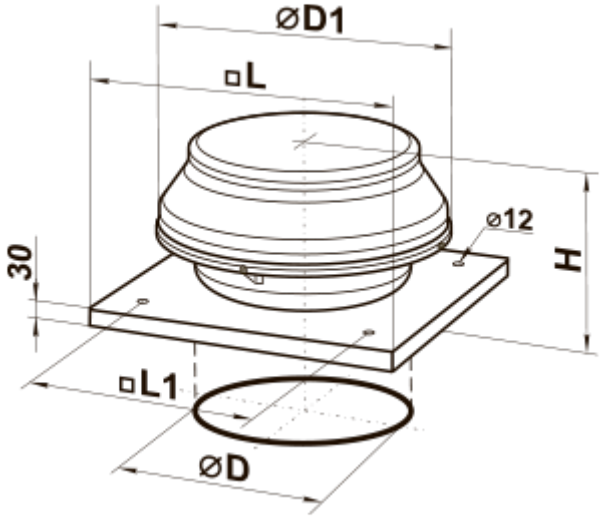

Accessories

Speed controllers

Name	Photo	Description
RSA5E-3,5-T		Speed controllers are applied for air flow control of single phase fans by means of motor step speed control
RSA5E-5,0-T		Speed controllers are applied for air flow control of single phase fans by means of motor step speed control
RSA5E-7,5-T		Speed controllers are applied for air flow control of single phase fans by means of motor step speed control

Accessories for roof fans

Name	Photo	Description
RKV 220-225		Mounting frame
RKVI 220-225		Mounting frame with thermal-insulating layer

Ecodesign

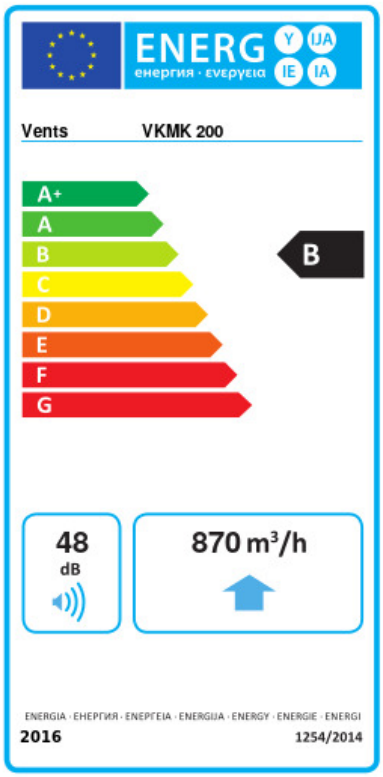

Trademark	Vents					
Model	VKMK 200					
Specific energy consumption (SEC) (kWh/(m²/a))	Cold		Average		Warm	
	-53.5	A+	-26.5	B	-11	E
Type of ventilation unit	Unidirectional					
Type of drive installed	Variable speed					
Type of heat recovery system	None					
Maximum flow rate (m³/h)	870					
Electric power input (W)	154					
Reference flow rate (m³/s)	0.169					
Reference pressure difference (Pa)	50					
Specific power input (SPI) (W/(m³/h))	0.139					
Control typology	Local demand control					
Maximum external leakage rates (%)	2.7					
Declared typology	RVU UVU					
Sound power level (dB(A))	48					
The annual electricity consumption (AEC) (kWh/a)	Cold		Average		Warm	
	74		74		74	
The annual heating saved (AHS) (kWh/a)	Cold		Average		Warm	
	5536		2830		1280	