VKMK 150

Roof centrifugal fans

• Sound pressure level LpA at 3 m: 47
• Impeller type: Centrifugal impeller with backward curved blades
• Casing material: Coated steel

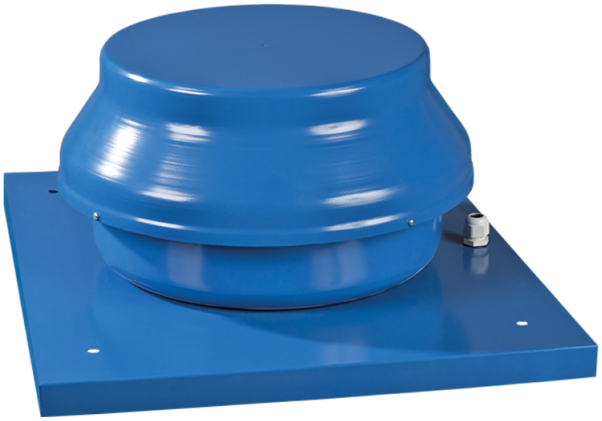

	Unit of measurement	VKMK 150
Connected air duct size	mm	150
Phases	-	1
Minimum supply voltage	V	220
Maximum supply voltage	V	240
Power supply frequency	Hz	50/60
Rated power	W	98
Unit current	A	0.43
Maximum airflow	m^3/h	555
Rotation speed at 50hz	-	2705
Sound pressure level LpA at 3 m	dB(A)	47
Weight	kg	7.2
Transported air temperature (max)	°C	55
Transported air temperature (min)	°C	-25
Ingress protection rating	-	IPX4
Ingress protection rating of the drive	-	IP44
Impeller material	-	Plastic
Size	mm	150

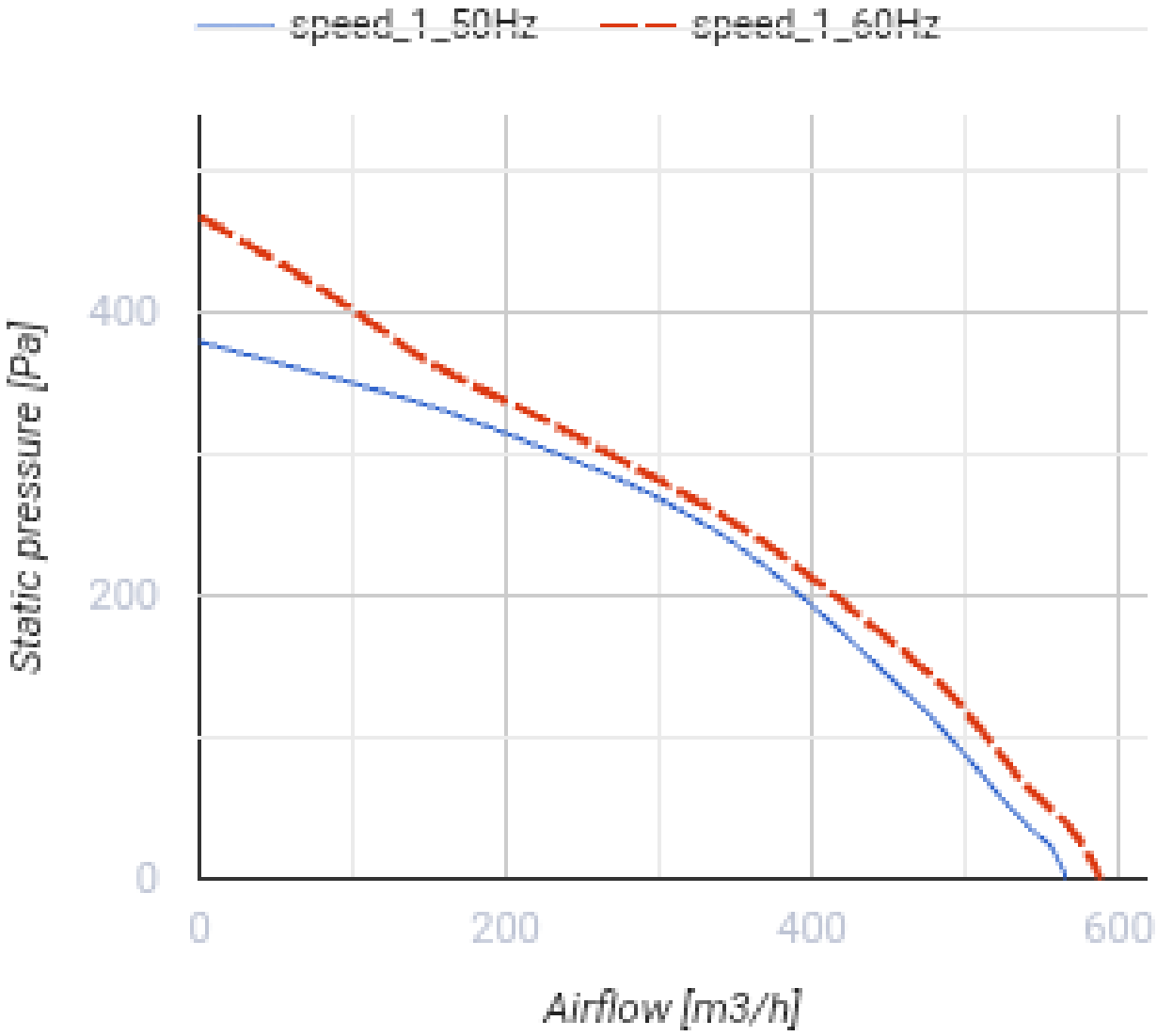
speed_1_50Hz
speed_1_60Hz
Static pressure [Pa]
400
200
0
0
200
400
600
Airflow [m3/h]

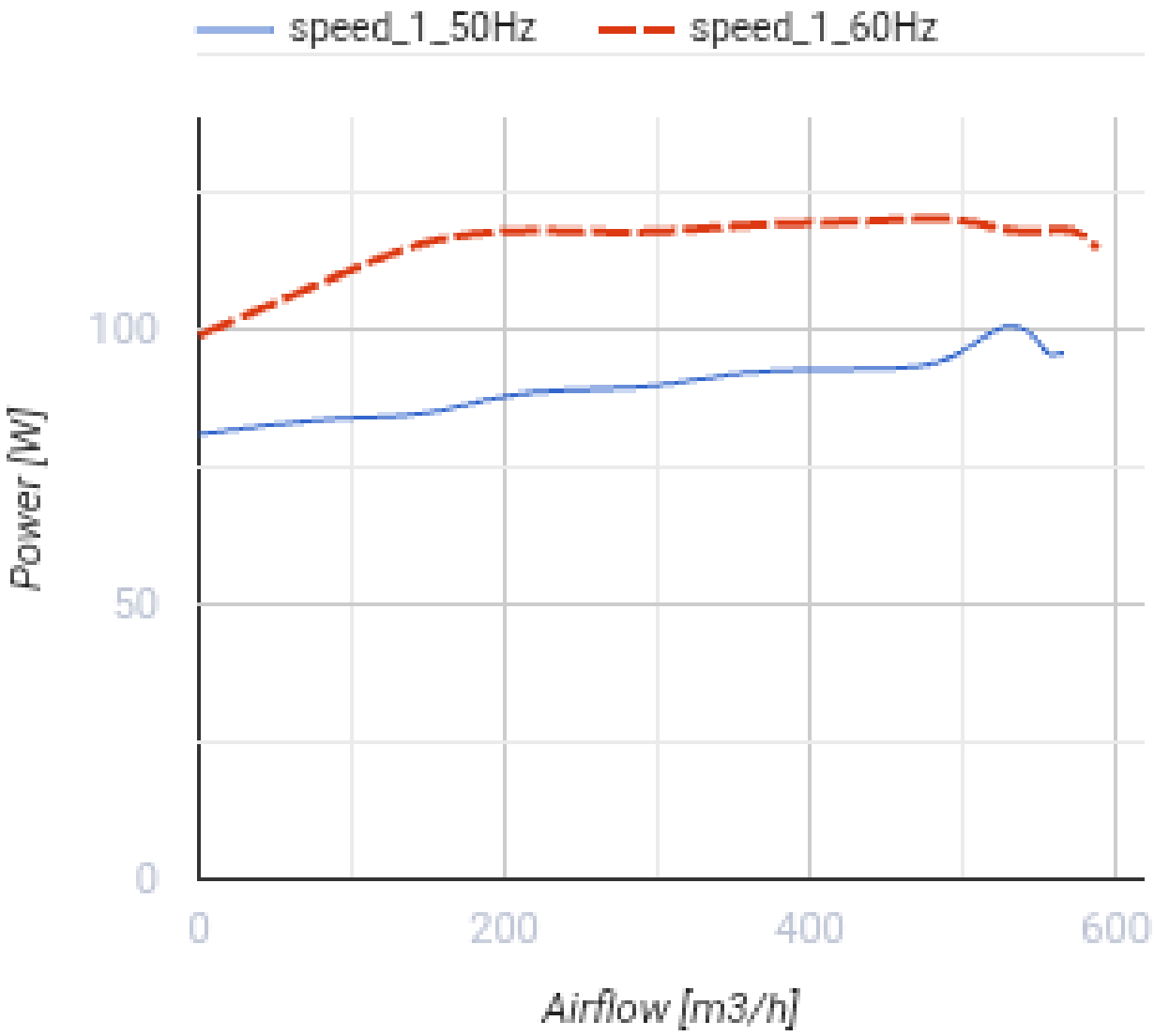

Dimensions

ØD	ØD1	H	L	L1
149	400	230	440	330

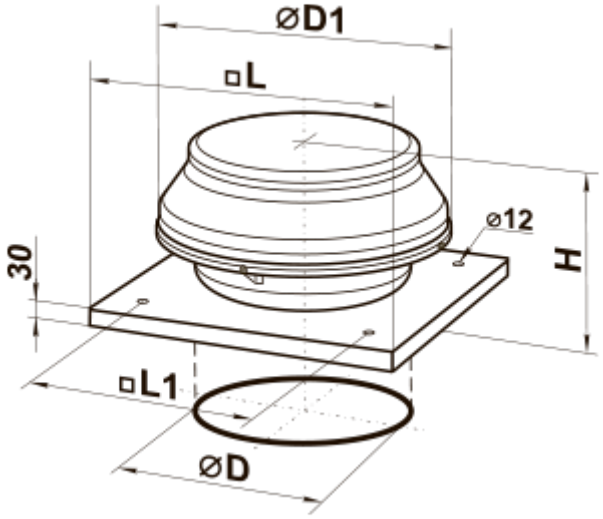

Accessories

Speed controllers

Name	Photo	Description
RSA5E-3,5-T		Speed controllers are applied for air flow control of single phase fans by means of motor step speed control
RSA5E-5,0-T		Speed controllers are applied for air flow control of single phase fans by means of motor step speed control
RSA5E-7,5-T		Speed controllers are applied for air flow control of single phase fans by means of motor step speed control

Ecodesign

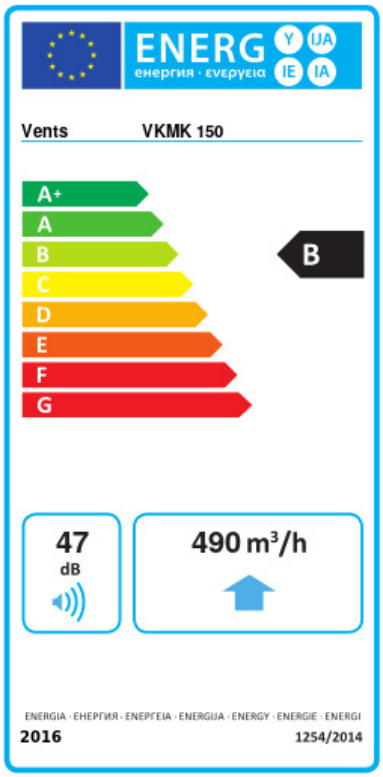

Trademark	Vents					
Model	VKMK 150					
Specific energy consumption (SEC) (kWh/(m²/a))	Cold		Average		Warm	
	-53.3	A+	-26.2	B	-10.7	E
Type of ventilation unit	Unidirectional					
Type of drive installed	Variable speed					
Type of heat recovery system	None					
Maximum flow rate (m³/h)	490					
Electric power input (W)	98					
Reference flow rate (m³/s)	0.095					
Reference pressure difference (Pa)	50					
Specific power input (SPI) (W/(m³/h))	0.157					
Control typology	Local demand control					
Maximum external leakage rates (%)	2.7					
Sound power level (dB(A))	47					
Declared typology	RVU UVU					
The annual electricity consumption (AEC) (kWh/a)	Cold		Average		Warm	
	83		83		83	
The annual heating saved (AHS) (kWh/a)	Cold		Average		Warm	
	5536		2830		1280	