VKM 250 EC Q



Centrifugal inline fans with EC-motors

• Sound pressure level LpA at 3 m: 44
• Impeller type: Centrifugal impeller with backward curved blades
• Casing material: Coated steel
• Installation in any position

	Unit of measurement	VKM 250 EC Q
Connected air duct size	mm	250
Phases	-	1
Minimum supply voltage	V	230
Maximum supply voltage	V	230
Power supply frequency	Hz	50/60
Rated power	W	100
Unit current	A	0.74
Maximum airflow	m^3/h	2500
Rotation speed at 50hz	-	2500
Sound pressure level LpA at 3 m	dB(A)	44
Transported air temperature (max)	°C	60
Transported air temperature (min)	°C	-25
Ingress protection rating	-	IPX4
Ingress protection rating of the drive	-	IP44
Impeller material	-	Plastic

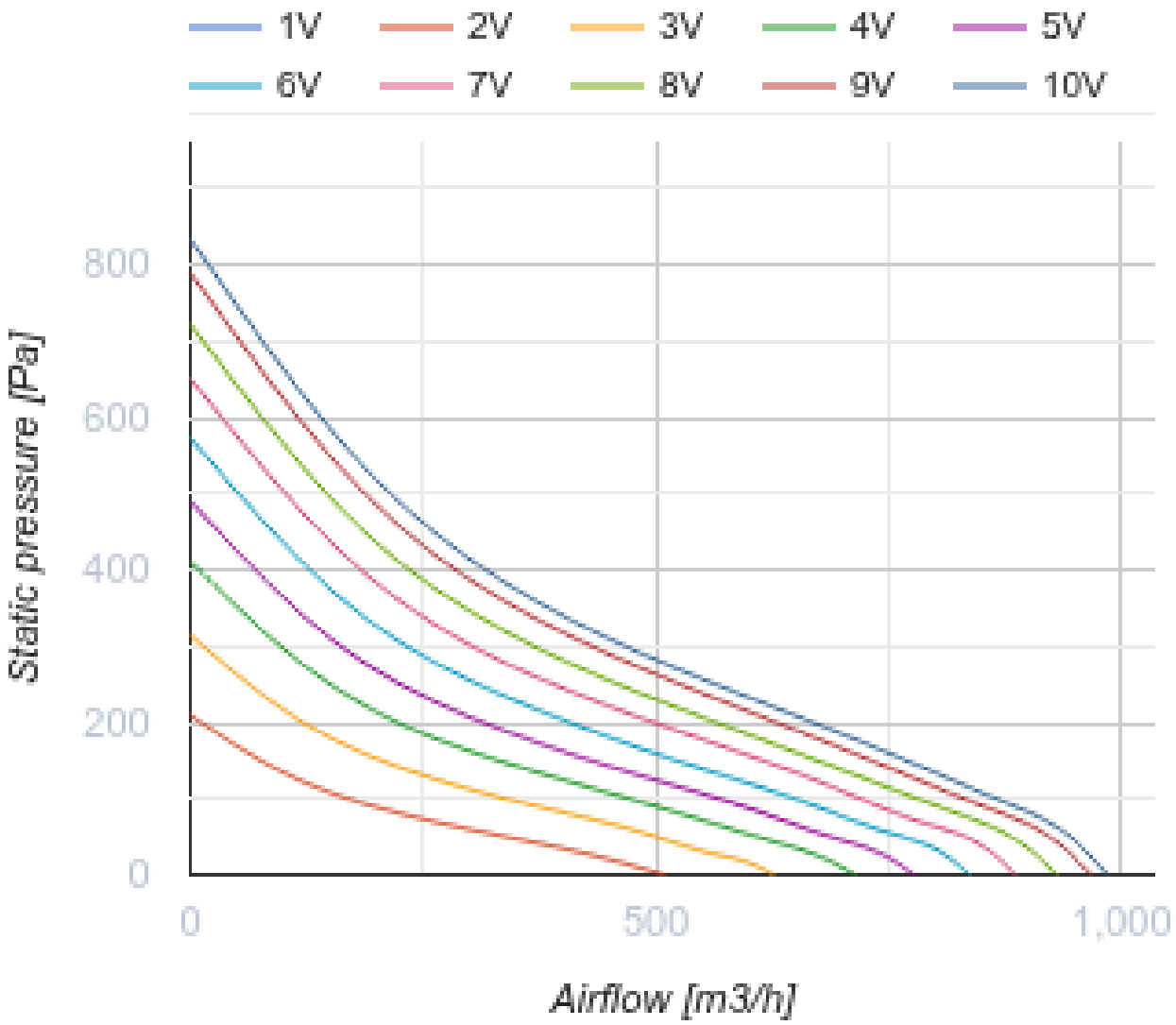
1V
2V
3V
4V
5V
6V
7V
8V
9V
10V
800
600
400
200
0
Static pressure [Pa]
0
500
1,000
Airflow [m3/h]

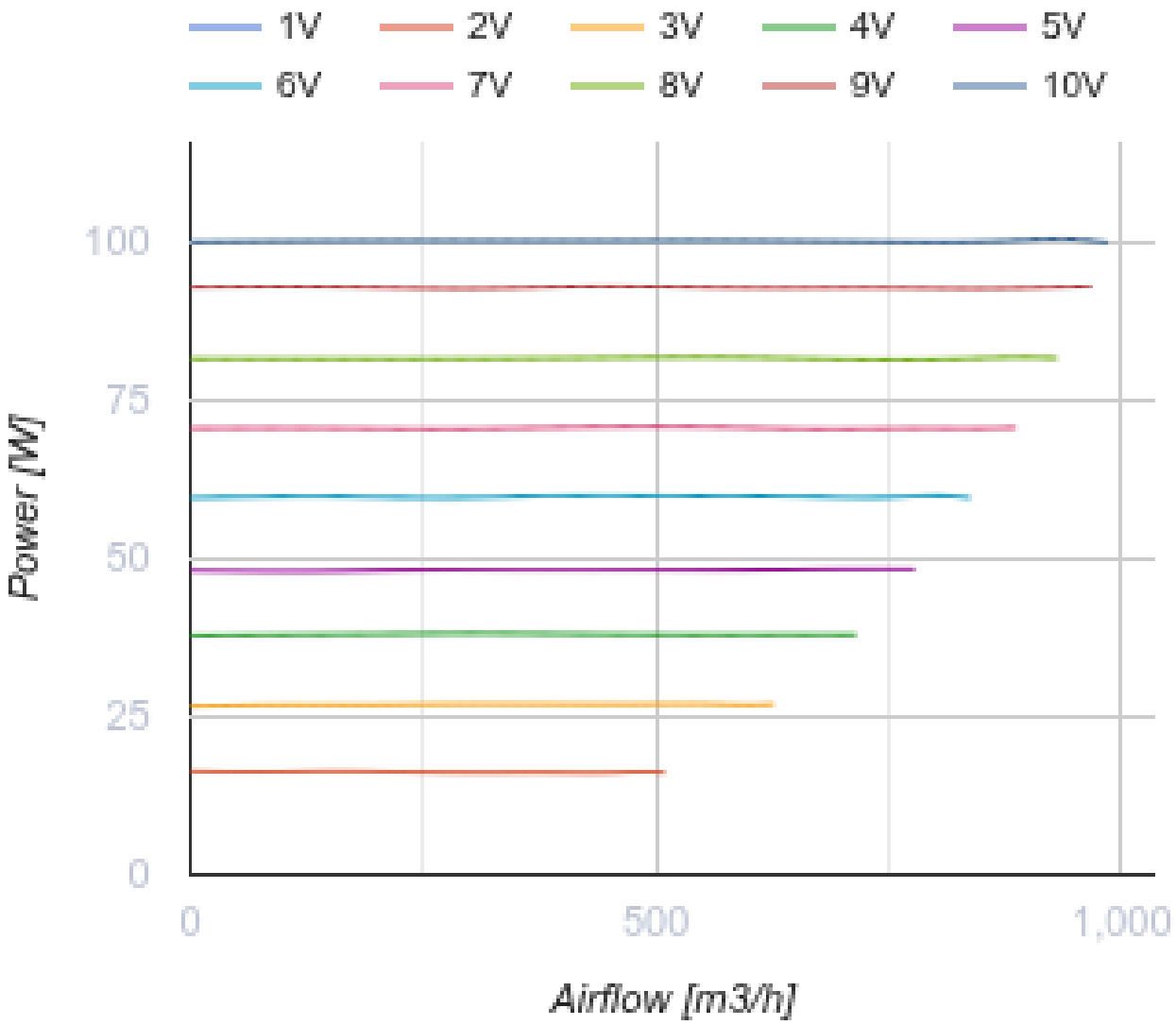

Dimensions

ØD	ØD1	B	B1	H	L	L1	L2	L3
248	345	395	355	435	250	25	30	40

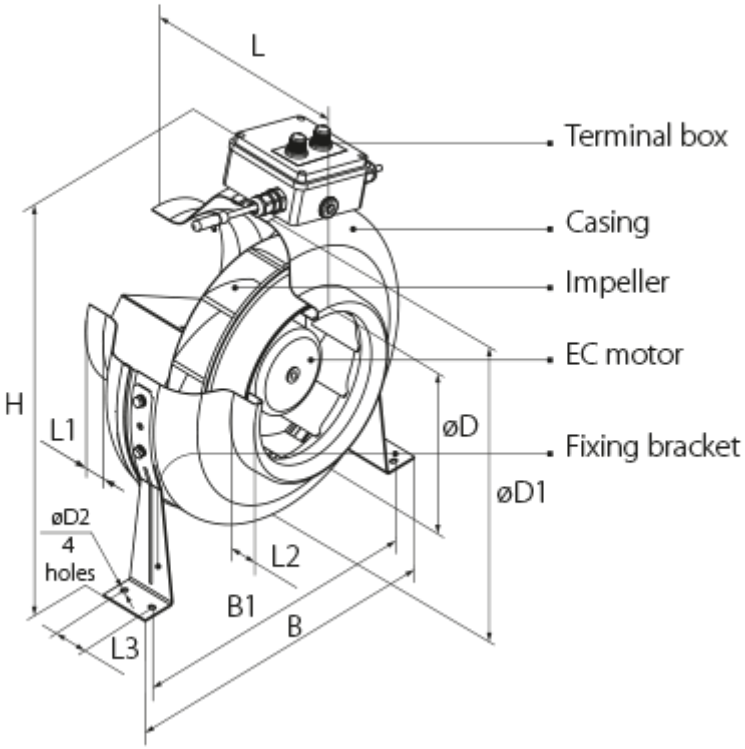
L
Terminal box
Casing
Impeller
EC motor
H
L1
øD
Fixing bracket
øD1
øD2
4
holes
L2
B1
B
L3

Ecodesign

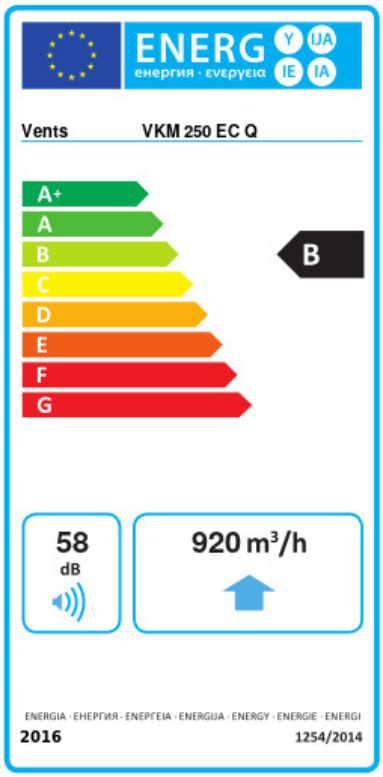

Trademark	Vents					
Model	VKM 250 EC Q					
Specific energy consumption (SEC) (kWh/(m²/a))	Cold		Average		Warm	
	-54.6	A+	-27.5	B	-12	E
Type of ventilation unit	Unidirectional					
Type of drive installed	Variable speed					
Type of heat recovery system	None					
Maximum flow rate (m³/h)	920					
Electric power input (W)	105					
Reference flow rate (m³/s)	0.179					
Reference pressure difference (Pa)	50					
Specific power input (SPI) (W/(m³/h))	0.061					
Control typology	Local demand control					
Maximum external leakage rates (%)	2.7					
Declared typology	RVU UVU					
Sound power level (dB(A))	58					
The annual electricity consumption (AEC) (kWh/a)	Cold		Average		Warm	
	32		32		32	
The annual heating saved (AHS) (kWh/a)	Cold		Average		Warm	
	5536		2830		1280	