# VKHz 6E 500

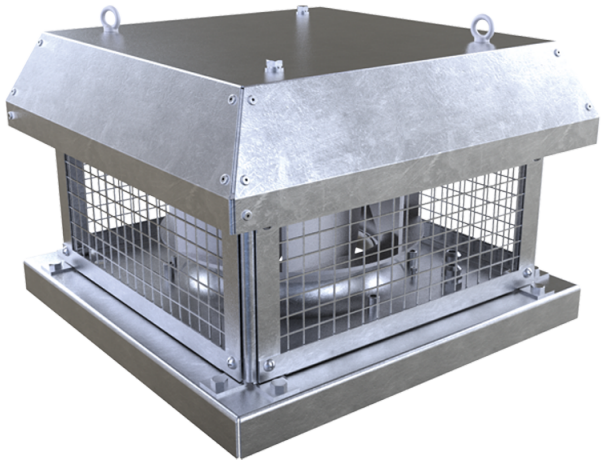

Roof centrifugal fans with horizontal air discharge

• Sound pressure level LpA at 3 m: 52
• Impeller type: Centrifugal impeller with backward curved blades
• Casing material: Galvanized steel

| | Unit of measurement | VKHz 6E 500 |
|---|---|---|
| Phases | - | 1 |
| Minimum supply voltage | V | 230 |
| Maximum supply voltage | V | 230 |
| Power supply frequency | Hz | 50/60 |
| Rated power | W | 407 |
| Unit current | A | 1.81 |
| Maximum airflow | $m^3/h$ | 5680 |
| Rotation speed at 50hz | - | 970 |
| Sound pressure level LpA at 3 m | dB(A) | 52 |
| Weight | kg | 52.8 |
| Transported air temperature (max) | °C | 60 |
| Transported air temperature (min) | °C | -25 |
| Ingress protection rating | - | IPX4 |
| Ingress protection rating of the drive | - | IP54 |
| Impeller material | - | Aluminium |
| Size | mm | 500 |

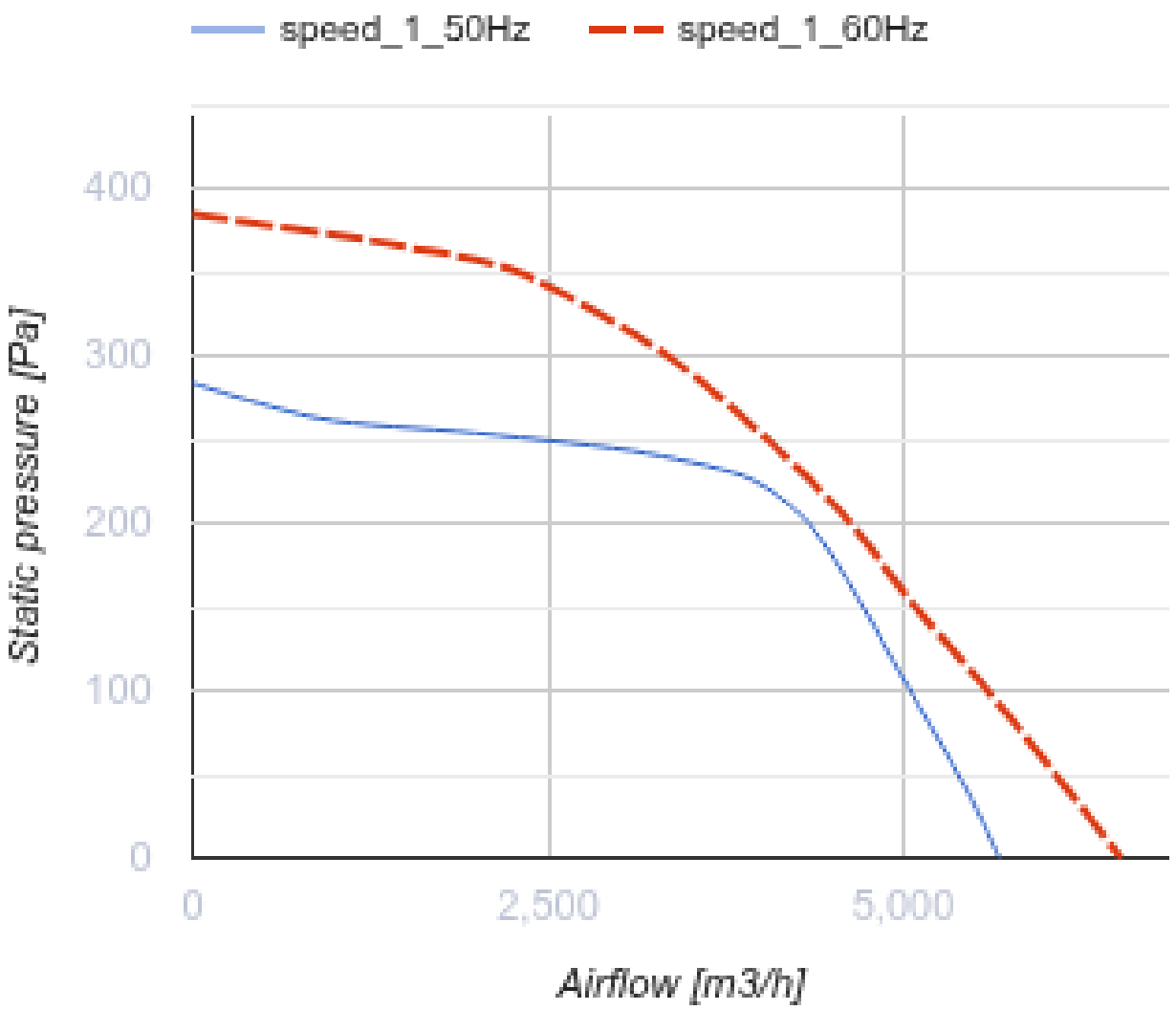
speed_1_50Hz
speed_1_60Hz
400
300
200
100
0
Static pressure [Pa]
0
2,500
5,000
Airflow [m3/h]

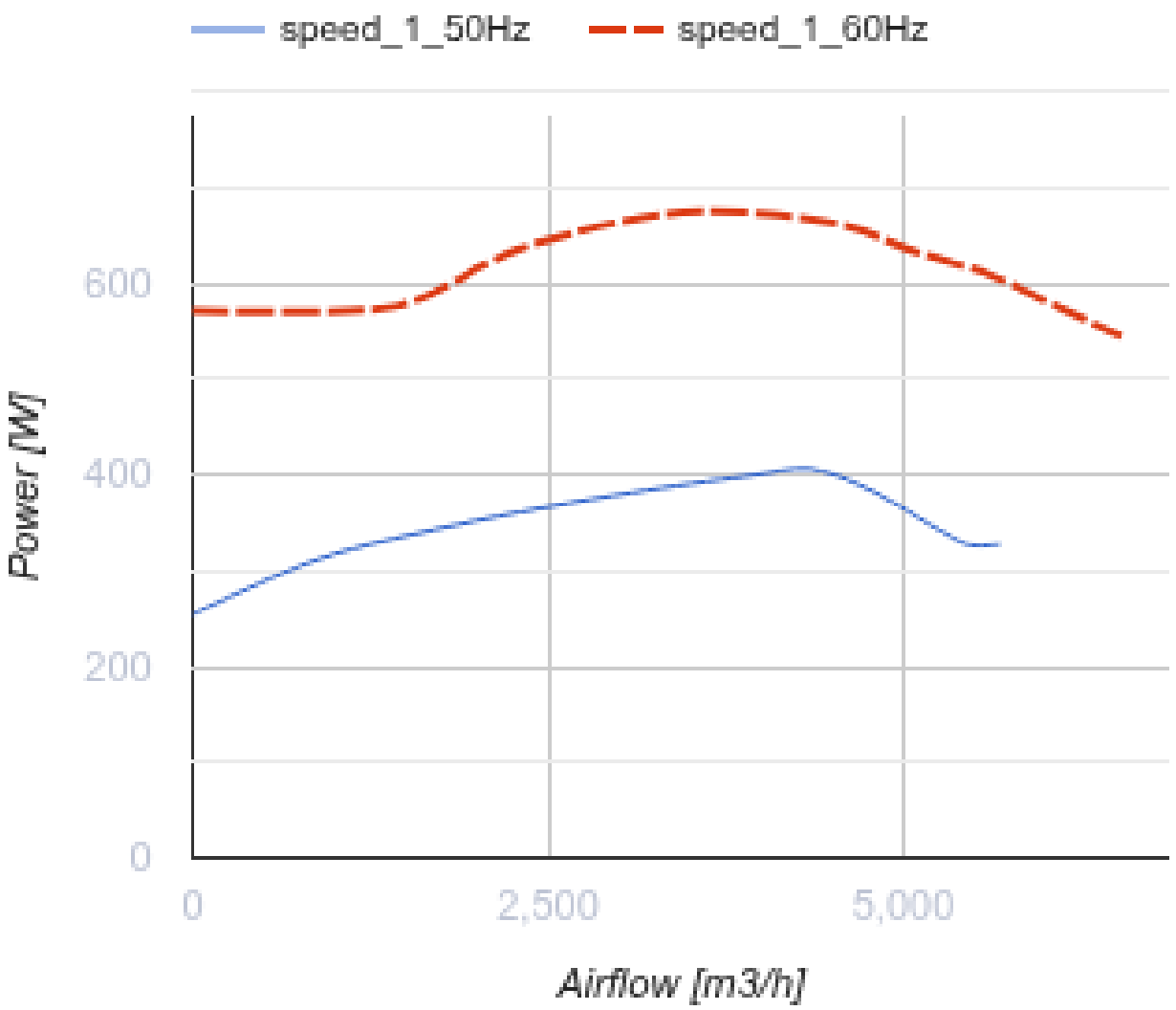


## Dimensions

| H | H1 | A | B | C | Ød | ØD |
|---|---|---|---|---|---|---|
| 461 | 501 | 710 | 700 | 535 | 11 | 438 |

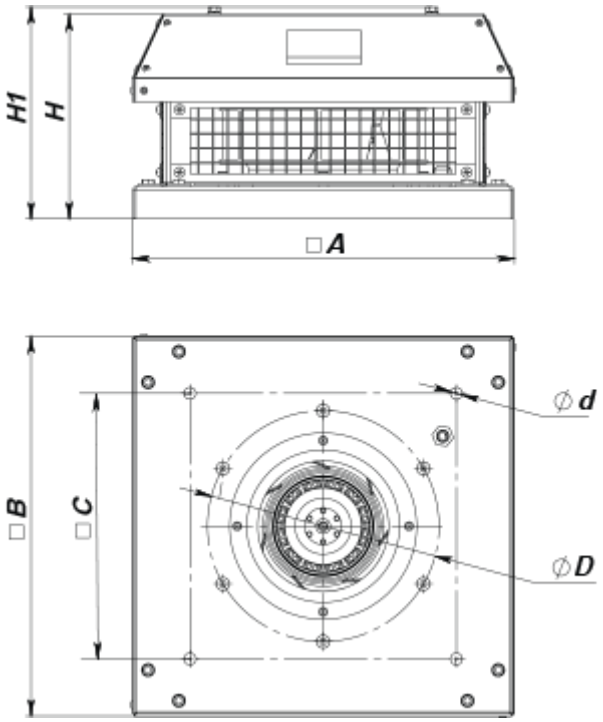


## Accessories

### Speed controllers

| Name | Photo | Description |
|---|---|---|
| RSA5E-3,5-T |  | Speed controllers are applied for air flow control of single phase fans by means of motor step speed control |

### Accessories for roof fans

| Name | Photo | Description |
|---|---|---|
| RKV 450-500 |  | Mounting frame |
| RKVI 450-500 |  | Mounting frame with thermal-insulating layer |
| FKV 355-500 |  | Mating flange |
| GKV 355-500 |  | Flexible connector |
| KKV 355-500 |  | Backdraft damper |

## Ecodesign

| Trademark | Vents |
|---|---|
| Model | VKHz 6E 500 |
| Type of drive installed | External MSD or VSD |
| Type of heat recovery system | None |
| Nominal external pressure (Pa) | 226 |
| Maximum external leakage rates (%) | 2.7 |
| Static efficiency (%) | 63.1 |
| Declared typology | NRVU UVU |
| Effective electric power input (kW) | 0.4 |
| Sound power level (dB(A)) | 72 |