VKHz 6D 560

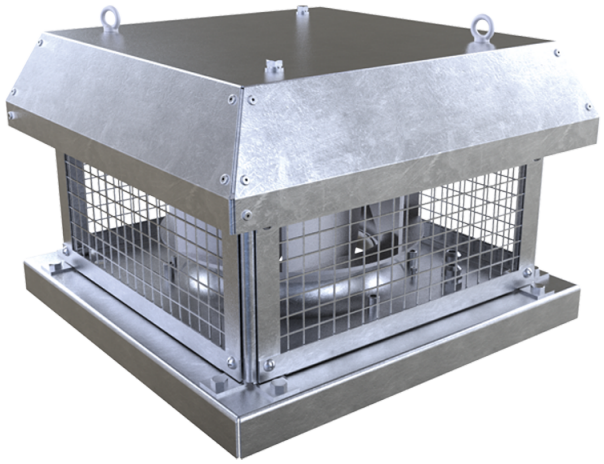

Roof centrifugal fans with horizontal air discharge

• Sound pressure level LpA at 3 m: 58
• Impeller type: Centrifugal impeller with backward curved blades
• Casing material: Galvanized steel

	Unit of measurement	VKHz 6D 560
Phases	-	3
Minimum supply voltage	V	400
Maximum supply voltage	V	400
Power supply frequency	Hz	50
Rated power	W	696
Unit current	A	1.44
Maximum airflow	m^3/h	9630
Rotation speed at 50hz	-	970
Sound pressure level LpA at 3 m	dB(A)	58
Weight	kg	76.4
Transported air temperature (max)	°C	50
Transported air temperature (min)	°C	-25
Ingress protection rating	-	IPX4
Ingress protection rating of the drive	-	IP54
Impeller material	-	Aluminium
Size	mm	560

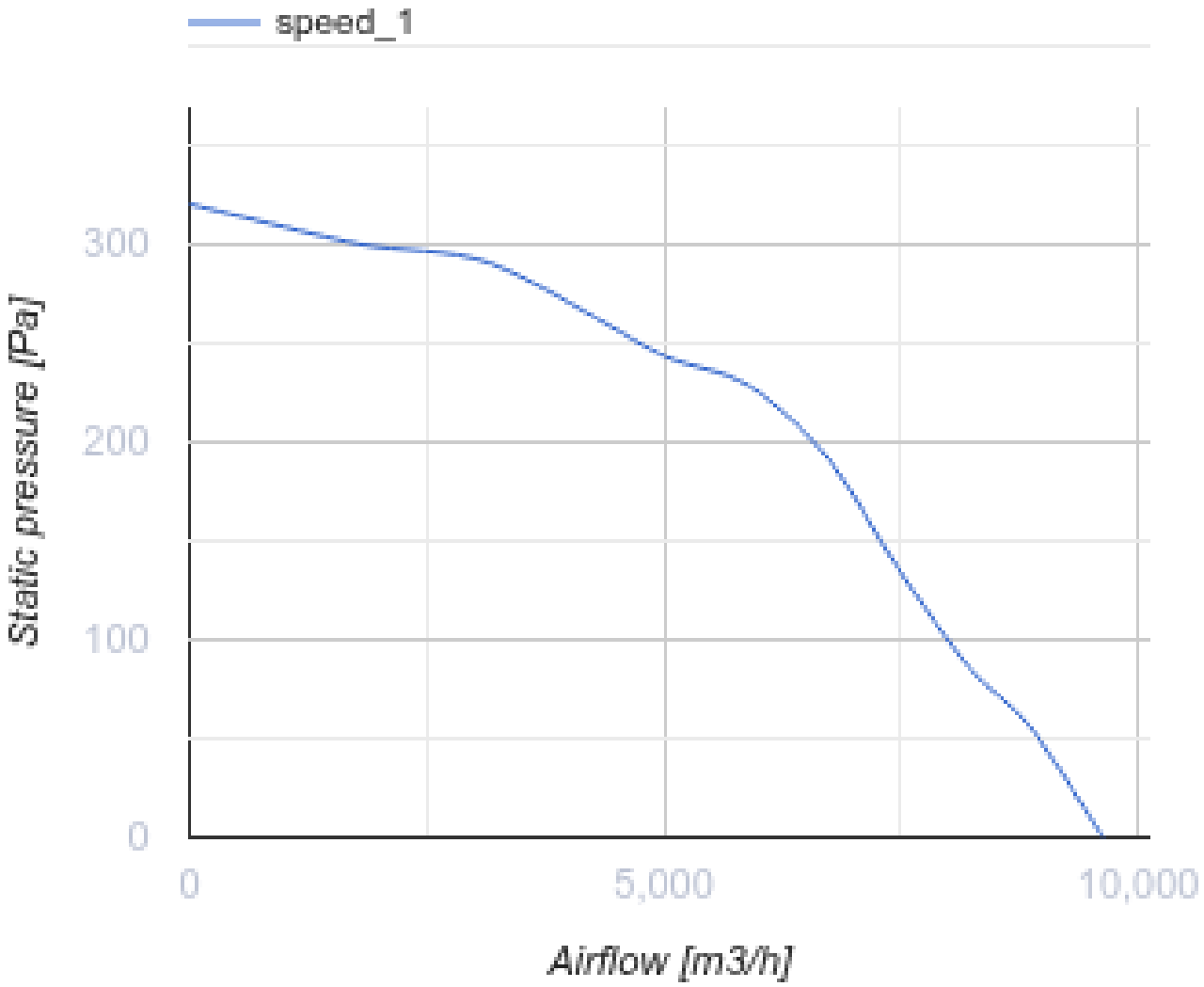
speed_1
300
200
100
0
Static pressure [Pa]
0
5,000
10,000
Airflow [m3/h]

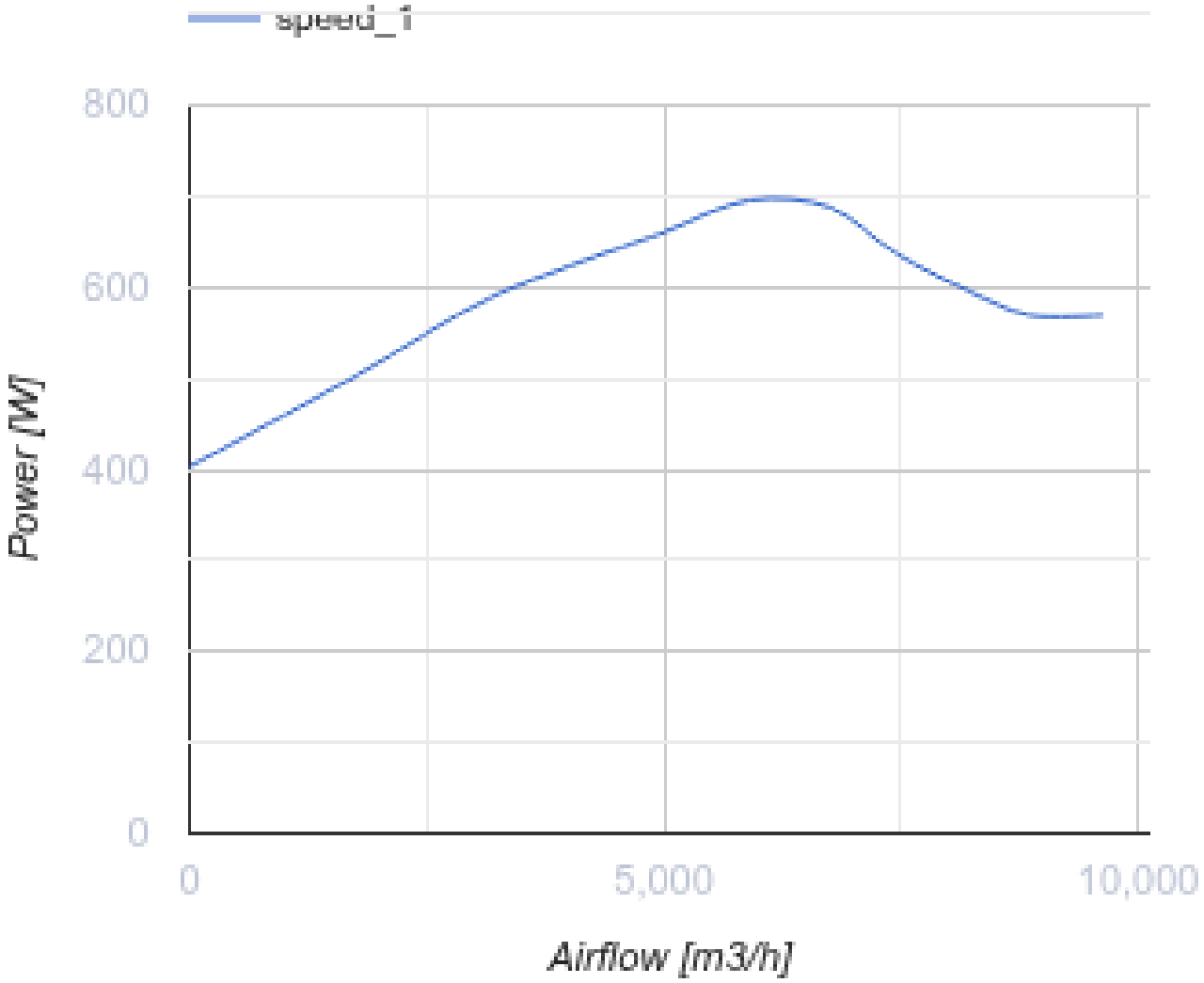

Dimensions

H	H1	A	B	C	Ød	ØD
489	528	900	895	750	11	605

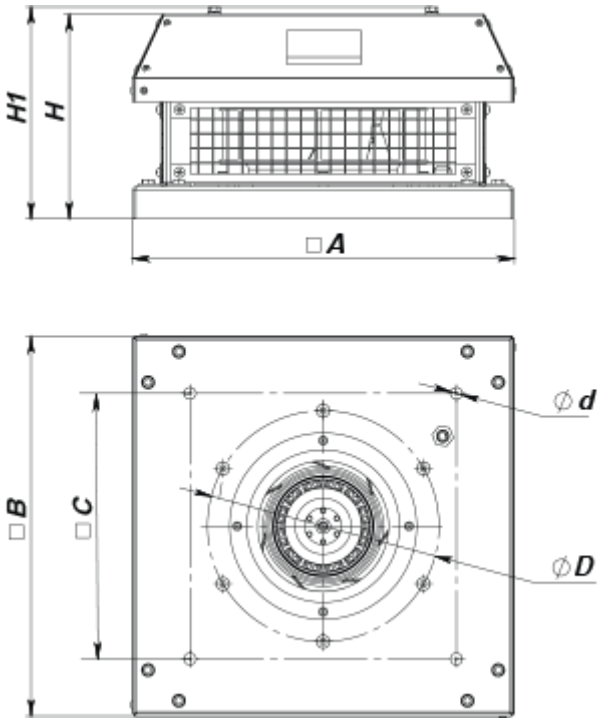

Accessories

Speed controllers

Name	Photo	Description
RSA5D-1,5-M		Three phase speed controller

Accessories for roof fans

Name	Photo	Description
RKV 560		Mounting frame
RKVI 560		Mounting frame with thermal-insulating layer
FKV 560		Mating flange
GKV 560		Flexible connector
KKV 560		Backdraft damper

Ecodesign

Trademark	Vents
Model	VKHz 6D 560
Type of drive installed	External MSD or VSD
Type of heat recovery system	None
Nominal external pressure (Pa)	228
Maximum external leakage rates (%)	2.7
Static efficiency (%)	54.8
Effective electric power input (kW)	0.696
Sound power level (dB(A))	78
Declared typology	NRVU UVU