VKHz 4E 280

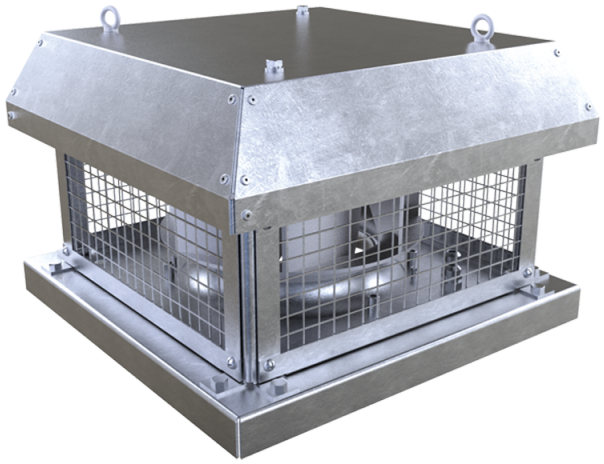

Roof centrifugal fans with horizontal air discharge

• Sound pressure level LpA at 3 m: 46
• Impeller type: Centrifugal impeller with backward curved blades
• Casing material: Galvanized steel

	Unit of measurement	VKHz 4E 280
Phases	-	1
Maximum supply voltage	V	230
Minimum supply voltage	V	230
Power supply frequency	Hz	50/60
Rated power	W	125
Unit current	A	0.61
Maximum airflow	m^3/h	1490
Rotation speed at 50hz	-	1446
Sound pressure level LpA at 3 m	dB(A)	46
Weight	kg	13.5
Transported air temperature (max)	°C	50
Transported air temperature (min)	°C	-25
Ingress protection rating	-	IPX4
Ingress protection rating of the drive	-	IP44
Impeller material	-	Galvanized steel
Size	mm	280

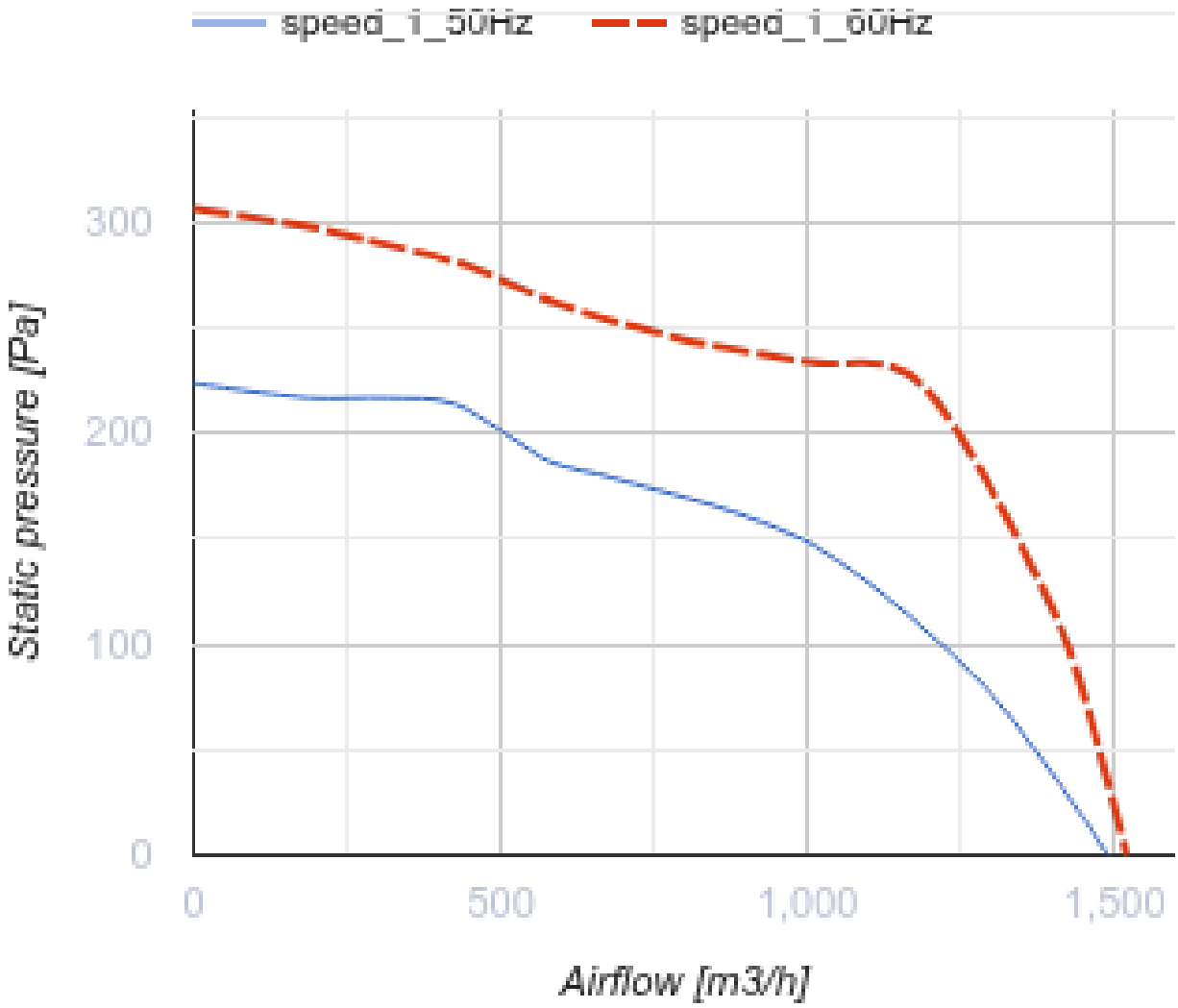
speed_i_50Hz
speed_i_60Hz
300
200
100
0
Static pressure [Pa]
0
500
1,000
1,500
Airflow [m3/h]

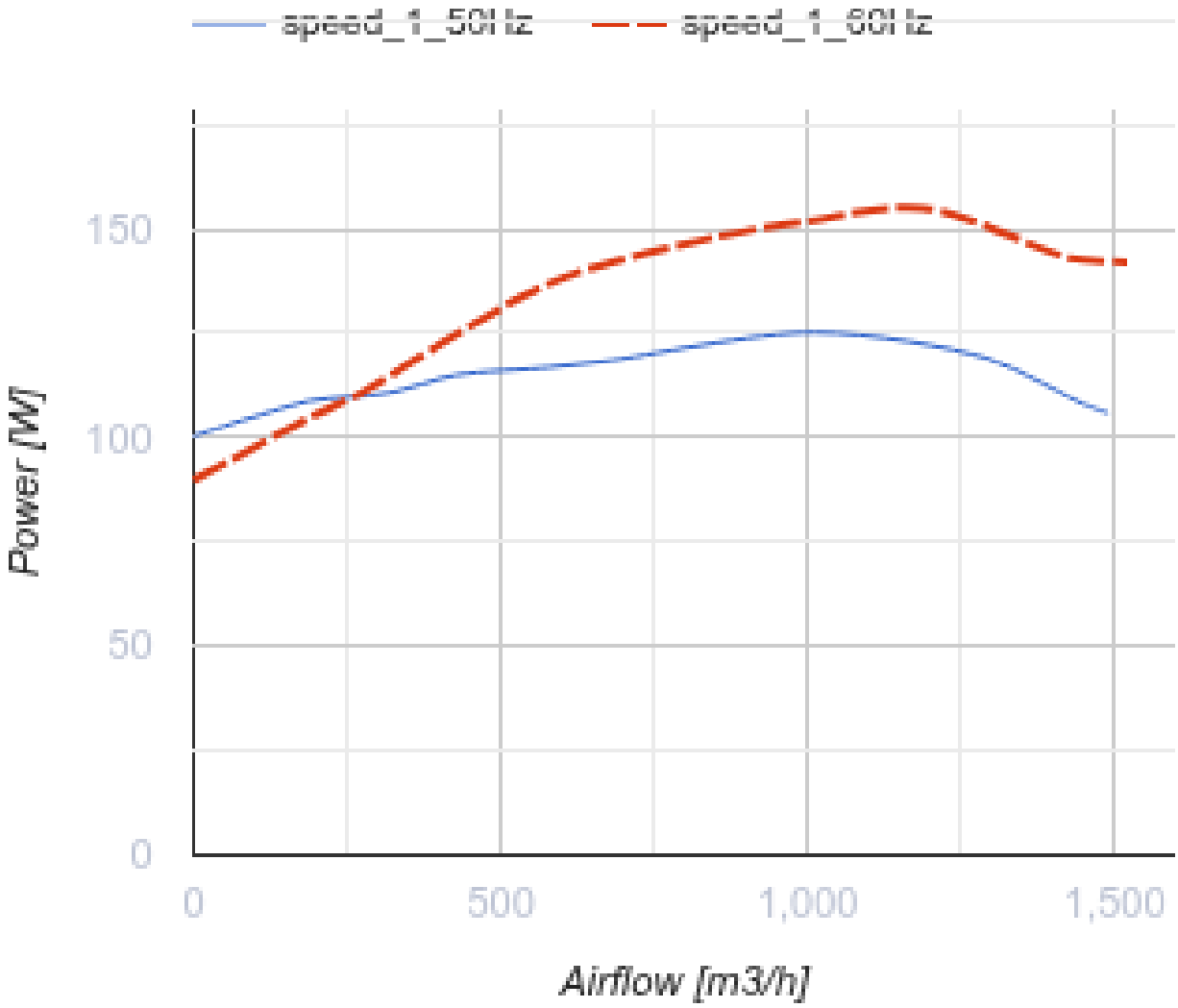

Dimensions

H	H1	A	B	C	Ød	ØD
265	272	451	450	330	11	291

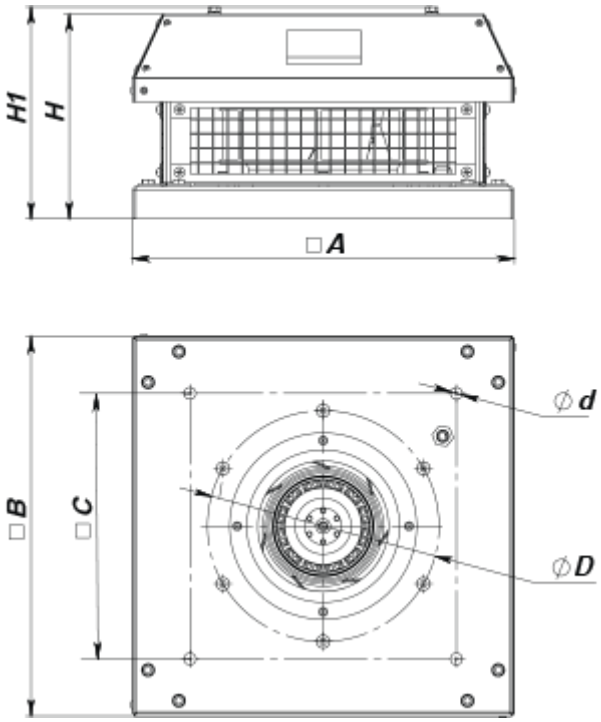

Accessories

Accessories for roof fans

Name	Photo	Description
RKV 250-315		Mounting frame
RKVI 250-315		Mounting frame with thermal-insulating layer
FKV 250-315		Mating flange
GKV 250-315		Flexible connector
KKV 250-315		Backdraft damper

Ecodesign

Trademark	Vents
Model	VKHz 4E 280
Type of drive installed	External MSD or VSD
Type of heat recovery system	None
Nominal external pressure (Pa)	147
Maximum external leakage rates (%)	2.7
Static efficiency (%)	33.6
Effective electric power input (kW)	0.125
Sound power level (dB(A))	66
Declared typology	NRVU UVU