VKHz 2E 220

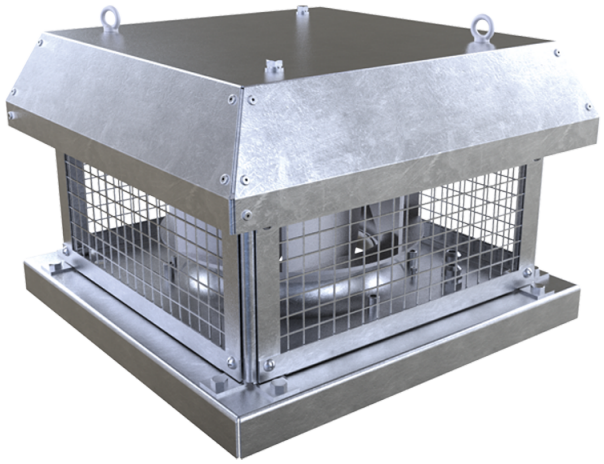

Roof centrifugal fans with horizontal air discharge

• Sound pressure level LpA at 3 m: 50
• Impeller type: Centrifugal impeller with backward curved blades
• Casing material: Galvanized steel

	Unit of measurement	VKHz 2E 220
Phases	-	1
Maximum supply voltage	V	230
Minimum supply voltage	V	230
Power supply frequency	Hz	50/60
Rated power	W	108
Unit current	A	0.49
Maximum airflow	m^3/h	880
Rotation speed at 50hz	-	2580
Sound pressure level LpA at 3 m	dB(A)	50
Weight	kg	8
Transported air temperature (max)	°C	50
Transported air temperature (min)	°C	-25
Ingress protection rating	-	IPX4
Ingress protection rating of the drive	-	IP44
Impeller material	-	Plastic
Size	mm	220

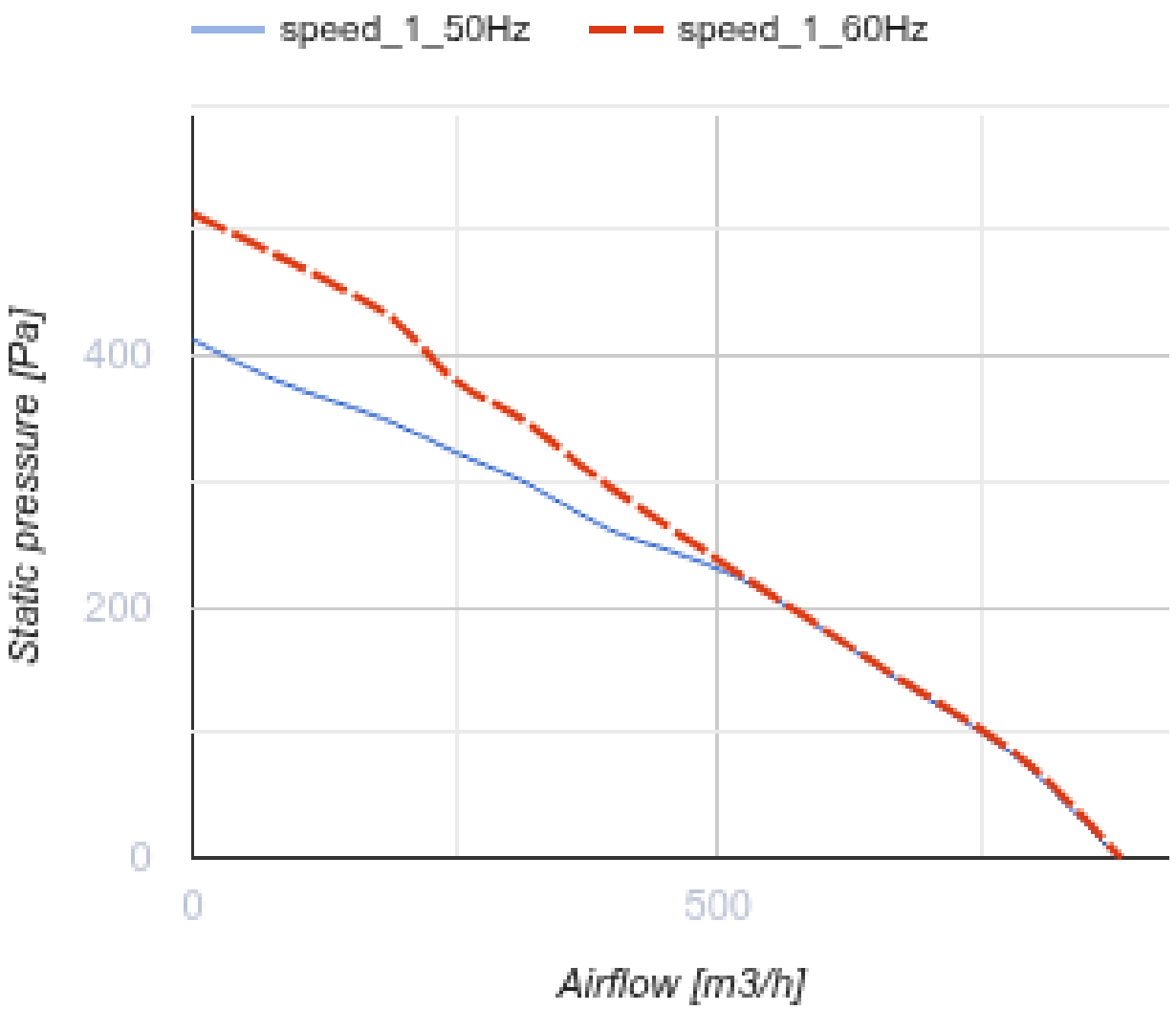
speed_1_50Hz
speed_1_60Hz
Static pressure [Pa]
400
200
0
0
500
Airflow [m3/h]

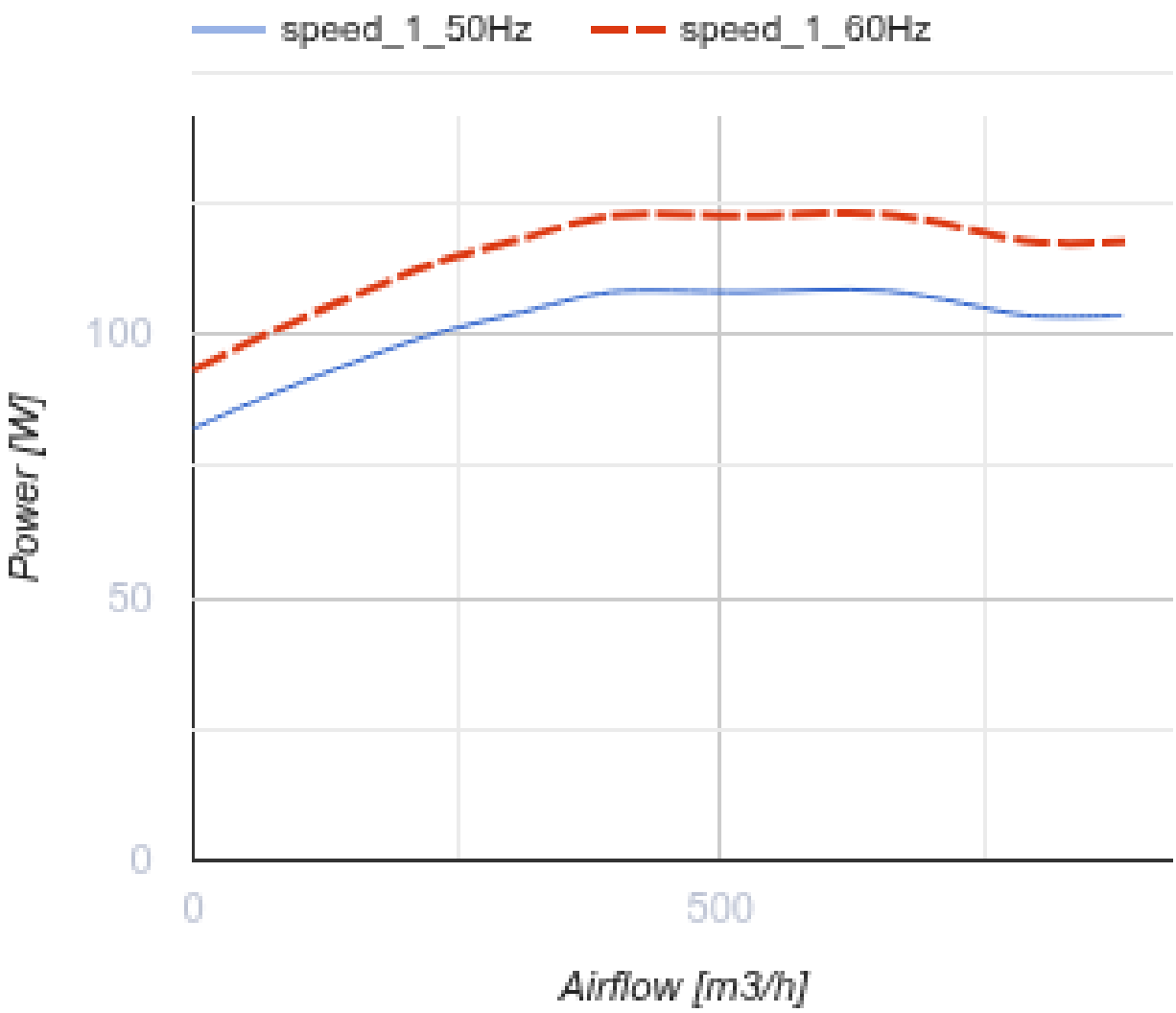

Dimensions

H	H1	A	B	C	Ød	ØD
180	186	337	338	245	11	213

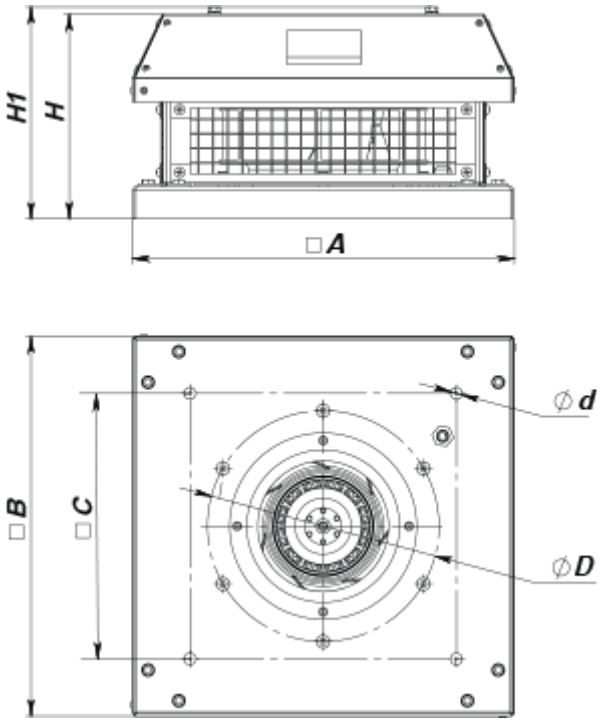

Accessories

Accessories for roof fans

Name	Photo	Description
RKV 220-225		Mounting frame
RKVI 220-225		Mounting frame with thermal-insulating layer
FKV 220-225		Mating flange
GKV 220-225		Flexible connector
KKV 220-225		Backdraft damper

Ecodesign

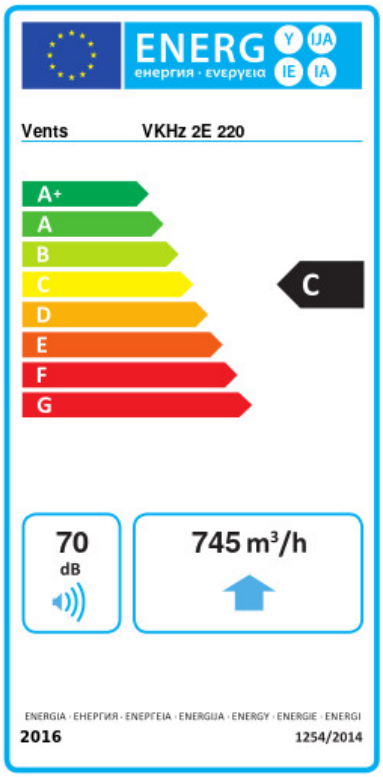

Trademark	Vents					
Model	VKHz 2E 220					
Specific energy consumption (SEC) (kWh/(m²/a))	Cold		Average		Warm	
	-52.6	A+	-25.6	C	-10.1	E
Type of ventilation unit	Unidirectional					
Type of drive installed	Variable speed					
Type of heat recovery system	None					
Maximum flow rate (m³/h)	745					
Electric power input (W)	106					
Reference flow rate (m³/s)	0.145					
Reference pressure difference (Pa)	50					
Specific power input (SPI) (W/(m³/h))	0.207					
Control typology	Local demand control					
Maximum external leakage rates (%)	2.7					
Sound power level (dB(A))	70					
Declared typology	RVU UVU					
The annual electricity consumption (AEC) (kWh/a)	Cold		Average		Warm	
	110		110		110	
The annual heating saved (AHS) (kWh/a)	Cold		Average		Warm	
	5536		2830		1280	