VKHz 225 EC

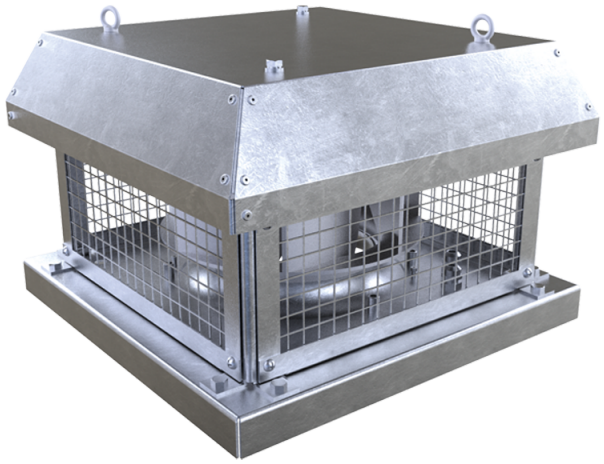

Roof centrifugal fans with horizontal air discharge with EC-motors

• Sound pressure level LpA at 3 m: 47
• Impeller type: Centrifugal impeller with backward curved blades
• Casing material: Galvanized steel

	Unit of measurement	VKHz 225 EC
Phases	-	1
Maximum supply voltage	V	230
Minimum supply voltage	V	230
Power supply frequency	Hz	50/60
Rated power	W	101
Unit current	A	0.8
Maximum airflow	m^3/h	1290
Rotation speed at 50hz	-	2400
Sound pressure level LpA at 3 m	dB(A)	47
Weight	kg	8
Transported air temperature (max)	°C	60
Transported air temperature (min)	°C	-25
Ingress protection rating	-	IPX4
Ingress protection rating of the drive	-	IP55
Impeller material	-	Plastic
Size	mm	225

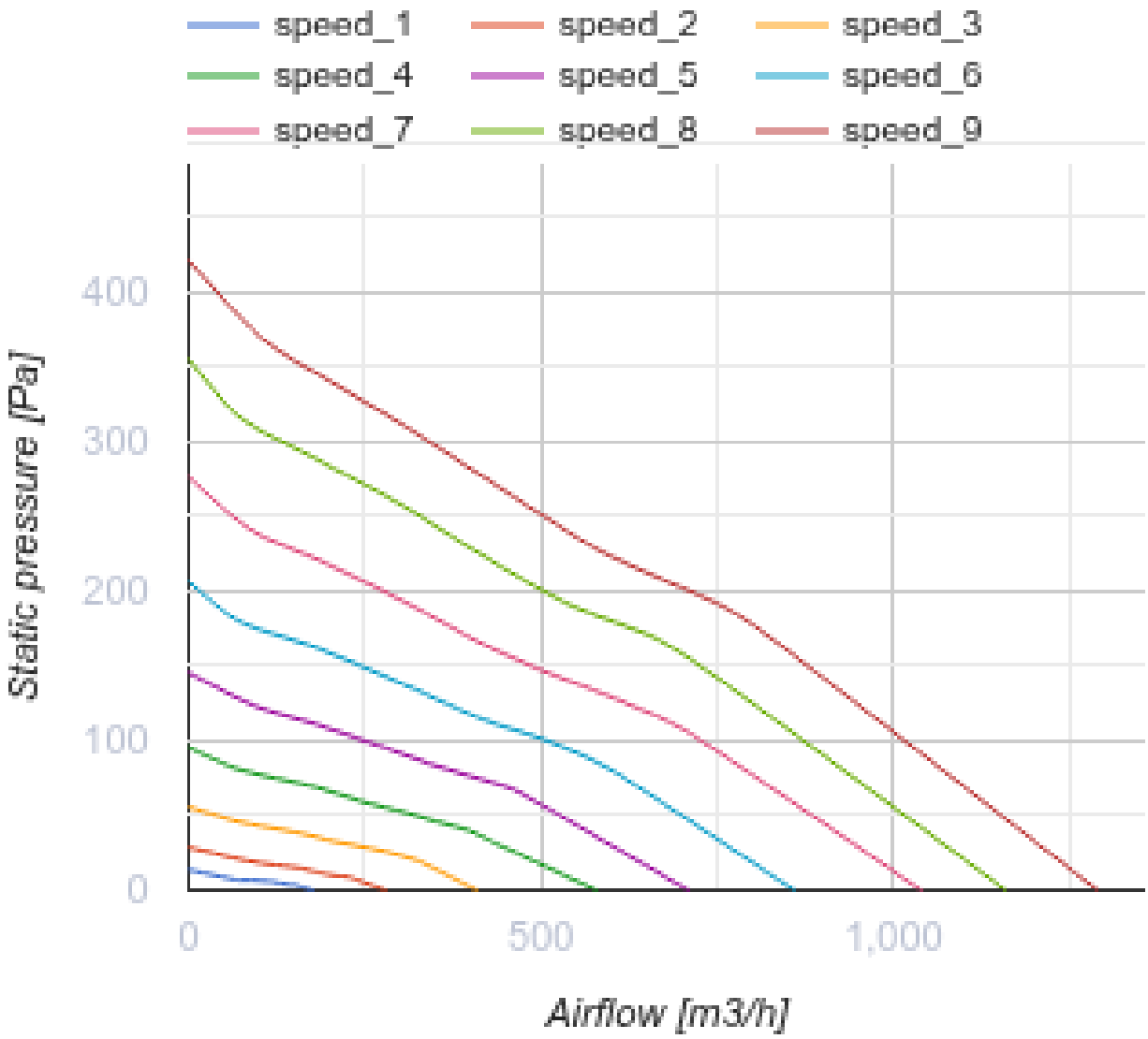
speed_1
speed_2
speed_3
speed_4
speed_5
speed_6
speed_7
speed_8
speed_9
400
300
200
100
0
Static pressure [Pa]
0
500
1,000
Airflow [m3/h]

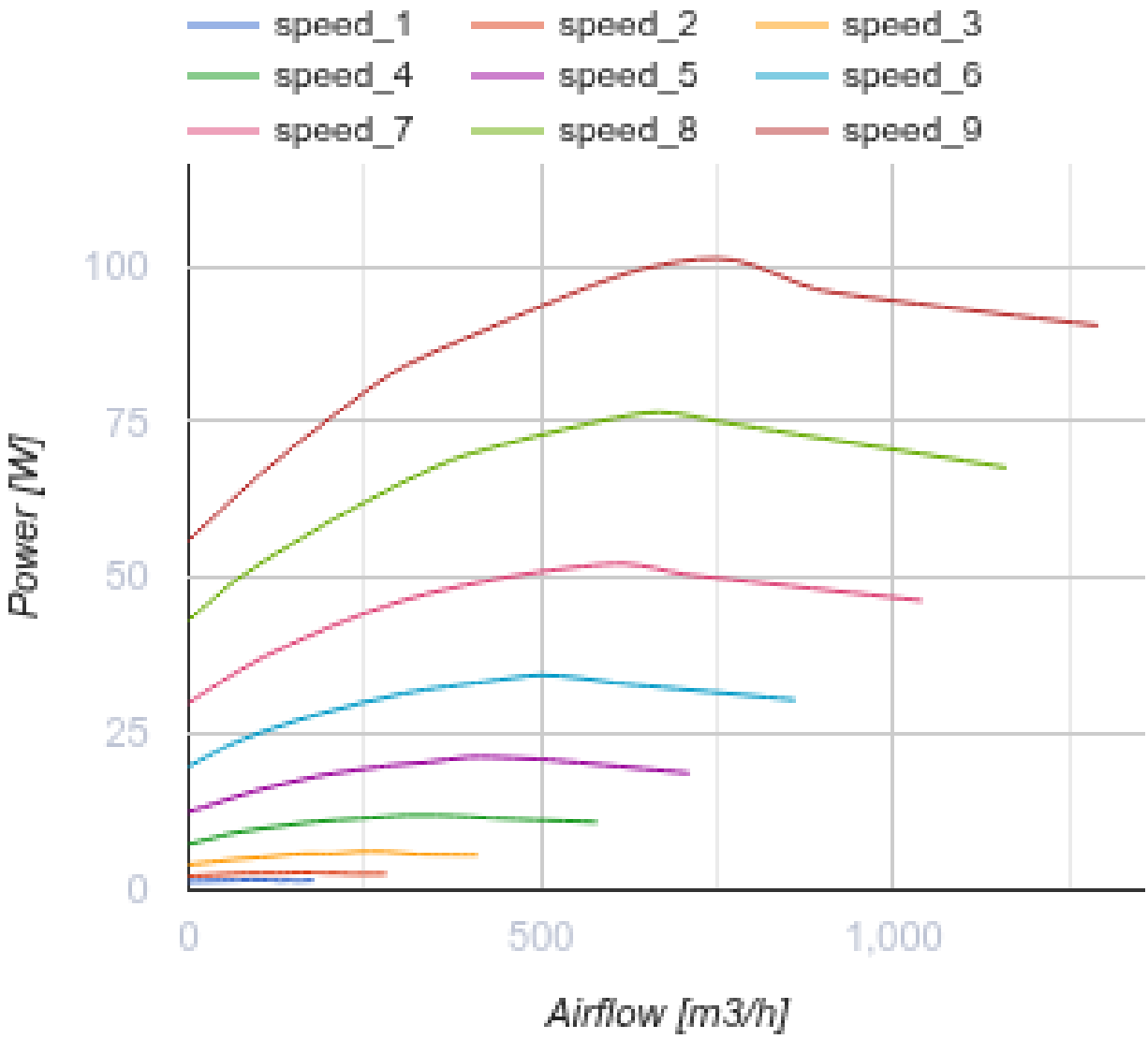

Dimensions

ØD	Ød	H	L	L1	L2
213	11	234	351	245	350

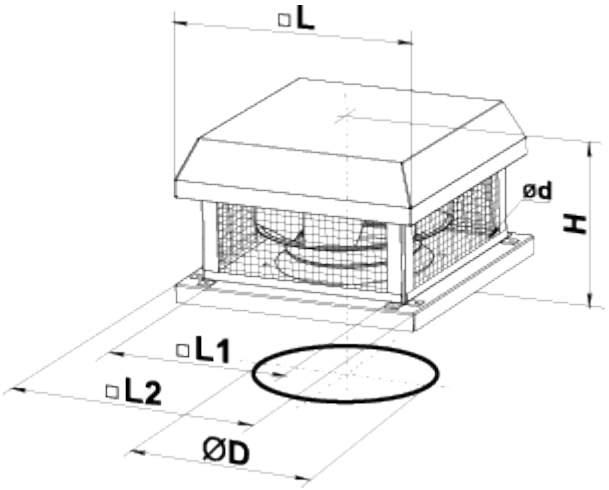

Accessories

Speed controllers

Name	Photo	Description
R-1/010		Speed controller for EC motors

Accessories for roof fans

Name	Photo	Description
RKV 220-225		Mounting frame
RKVI 220-225		Mounting frame with thermal-insulating layer
FKV 220-225		Mating flange
GKV 220-225		Flexible connector
KKV 220-225		Backdraft damper

Ecodesign

Trademark	Vents
Model	VKHz 225 EC
Type of drive installed	Integrated VSD
Type of heat recovery system	None
Nominal external pressure (Pa)	186
Maximum external leakage rates (%)	2.7
Static efficiency (%)	48.3
Sound power level (dB(A))	67
Effective electric power input (kW)	0.098
Declared typology	NRVU UVU