VKHz 190 EC

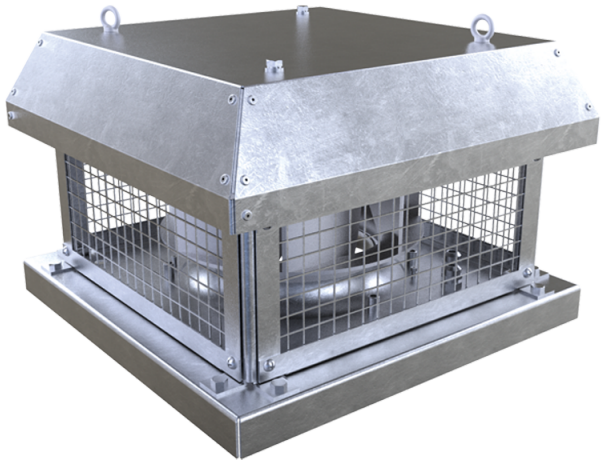

Roof centrifugal fans with horizontal air discharge with EC-motors

• Sound pressure level LpA at 3 m: 52
• Impeller type: Centrifugal impeller with backward curved blades
• Casing material: Galvanized steel

	Unit of measurement	VKHz 190 EC
Phases	-	1
Minimum supply voltage	V	230
Maximum supply voltage	V	230
Power supply frequency	Hz	50/60
Rated power	W	102
Unit current	A	0.77
Maximum airflow	m^3/h	670
Rotation speed at 50hz	-	3520
Sound pressure level LpA at 3 m	dB(A)	52
Weight	kg	8
Transported air temperature (max)	°C	60
Transported air temperature (min)	°C	-25
Ingress protection rating	-	IPX4
Ingress protection rating of the drive	-	IP55
Impeller material	-	Plastic
Size	mm	190

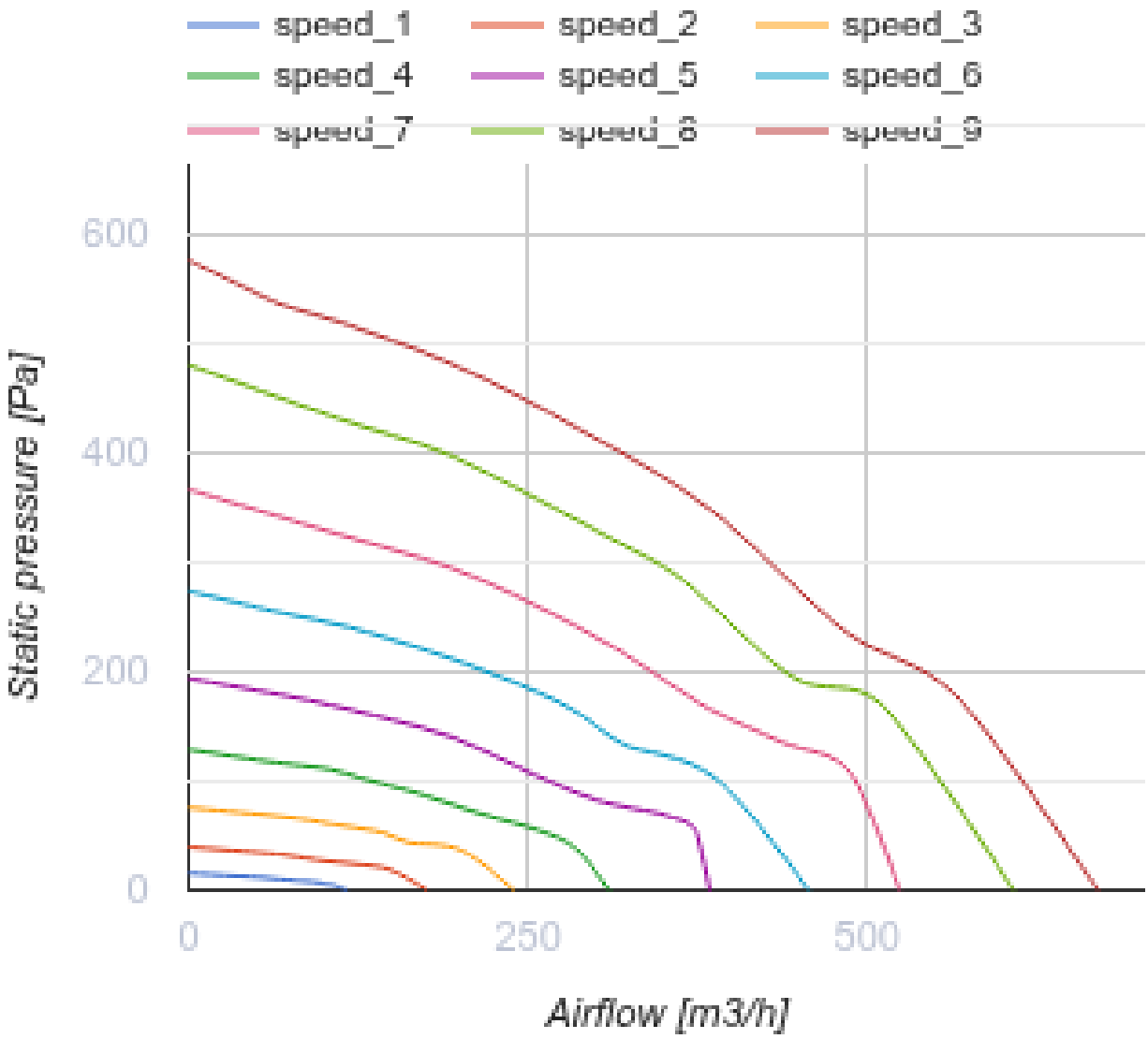
speed_1
speed_2
speed_3
speed_4
speed_5
speed_6
speed_7
speed_8
speed_9
600
400
200
0
Static pressure [Pa]
0
250
500
Airflow [m3/h]

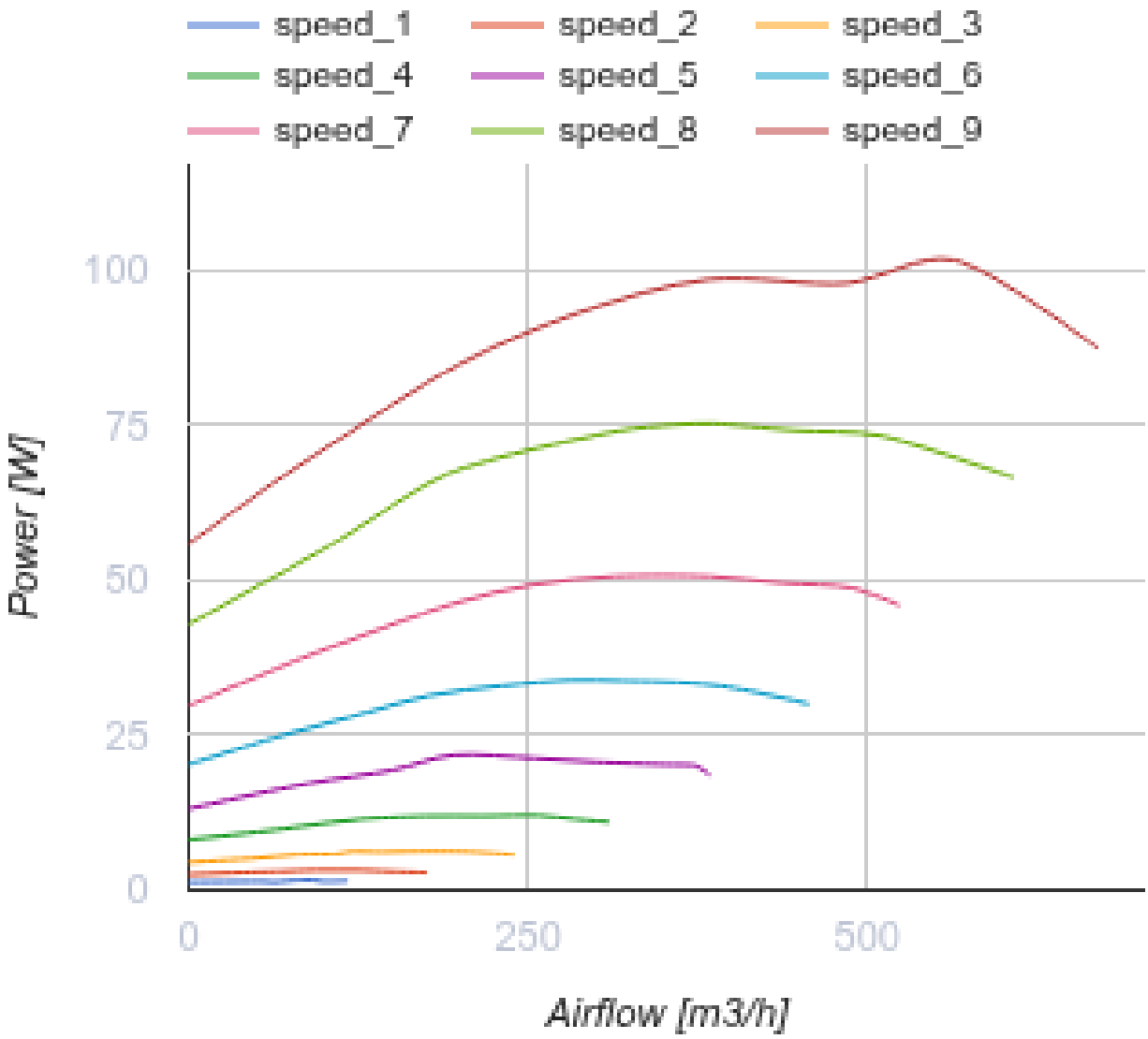

Dimensions

ØD	Ød	H	L	L1	L2
213	11	189	351	245	350

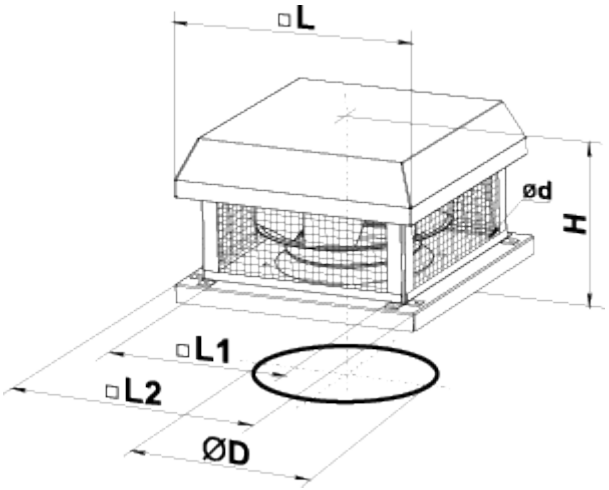

Accessories

Speed controllers

Name	Photo	Description
R-1/010		Speed controller for EC motors

Accessories for roof fans

Name	Photo	Description
RKV 220-225		Mounting frame
RKVI 220-225		Mounting frame with thermal-insulating layer
FKV 220-225		Mating flange
GKV 220-225		Flexible connector
KKV 220-225		Backdraft damper

Ecodesign

Trademark	Vents					
Model	VKHz 190 EC					
Specific energy consumption (SEC) (kWh/(m²/a))	Cold		Average		Warm	
	-34.1	A	-16.2	E	-5.9	F
Type of ventilation unit	Unidirectional					
Type of drive installed	Multi-speed					
Type of heat recovery system	None					
Maximum flow rate (m³/h)	115					
Electric power input (W)	16					
Reference flow rate (m³/s)	0.022					
Specific power input (SPI) (W/(m³/h))	0.089					
Control typology	Clock control					
Maximum external leakage rates (%)	2.7					
Declared typology	RVU UVU					
Sound power level (dB(A))	56					
The annual electricity consumption (AEC) (kWh/a)	Cold		Average		Warm	
	104		104		104	
The annual heating saved (AHS) (kWh/a)	Cold		Average		Warm	
	3667		1874		848	