VKHCA 2E 225

Roof centrifugal fans

• Sound pressure level LpA at 3 m: 51
• Impeller type: Centrifugal impeller with backward curved blades
• Casing material: Aluminium

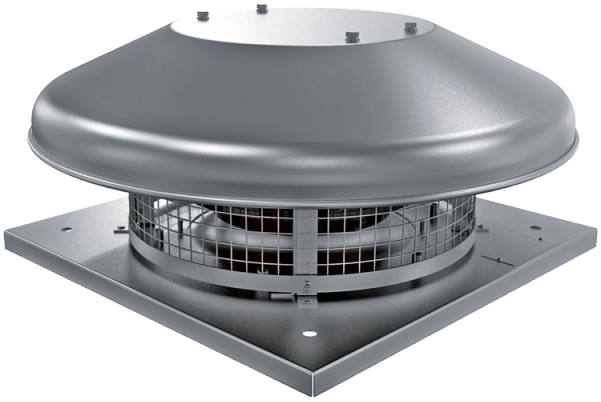

	Unit of measurement	VKHCA 2E 225	
Phases	-	1	
Minimum supply voltage	V	230	
Maximum supply voltage	V	230	
Power supply frequency	Hz	50	60
Rated power	W	123	
Unit current	A	0.54	
Maximum airflow	m^3/h	940	
Rotation speed at 50hz	-	2787	
Sound pressure level LpA at 3 m	dB(A)	51	
Weight	kg	7	
Transported air temperature (max)	°C	50	
Transported air temperature (min)	°C	-25	
Ingress protection rating	-	IPX4	
Ingress protection rating of the drive	-	IP44	
Size	mm	225	

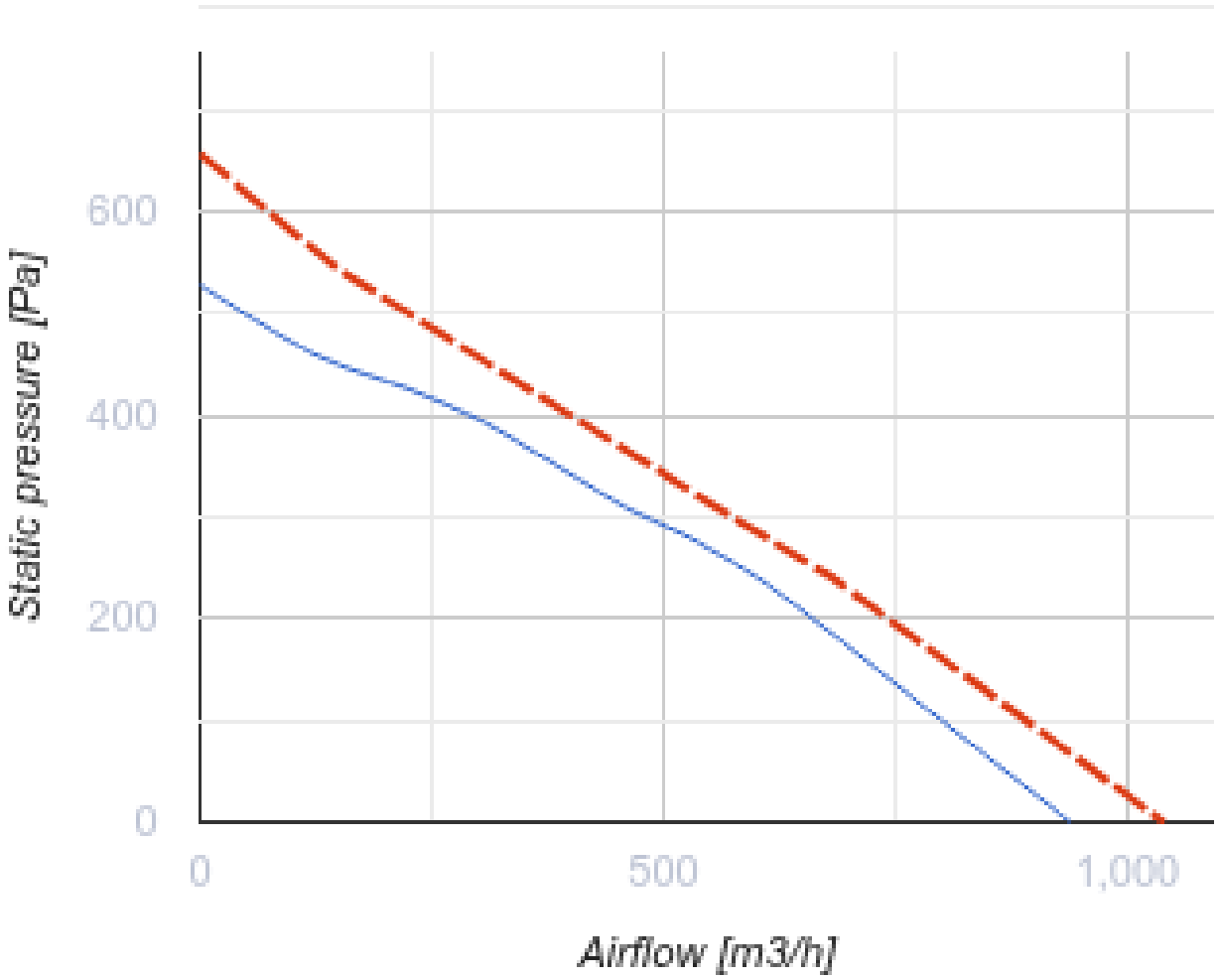
Static pressure [Pa]
600
400
200
0
0
500
1,000
Airflow [m3/h]

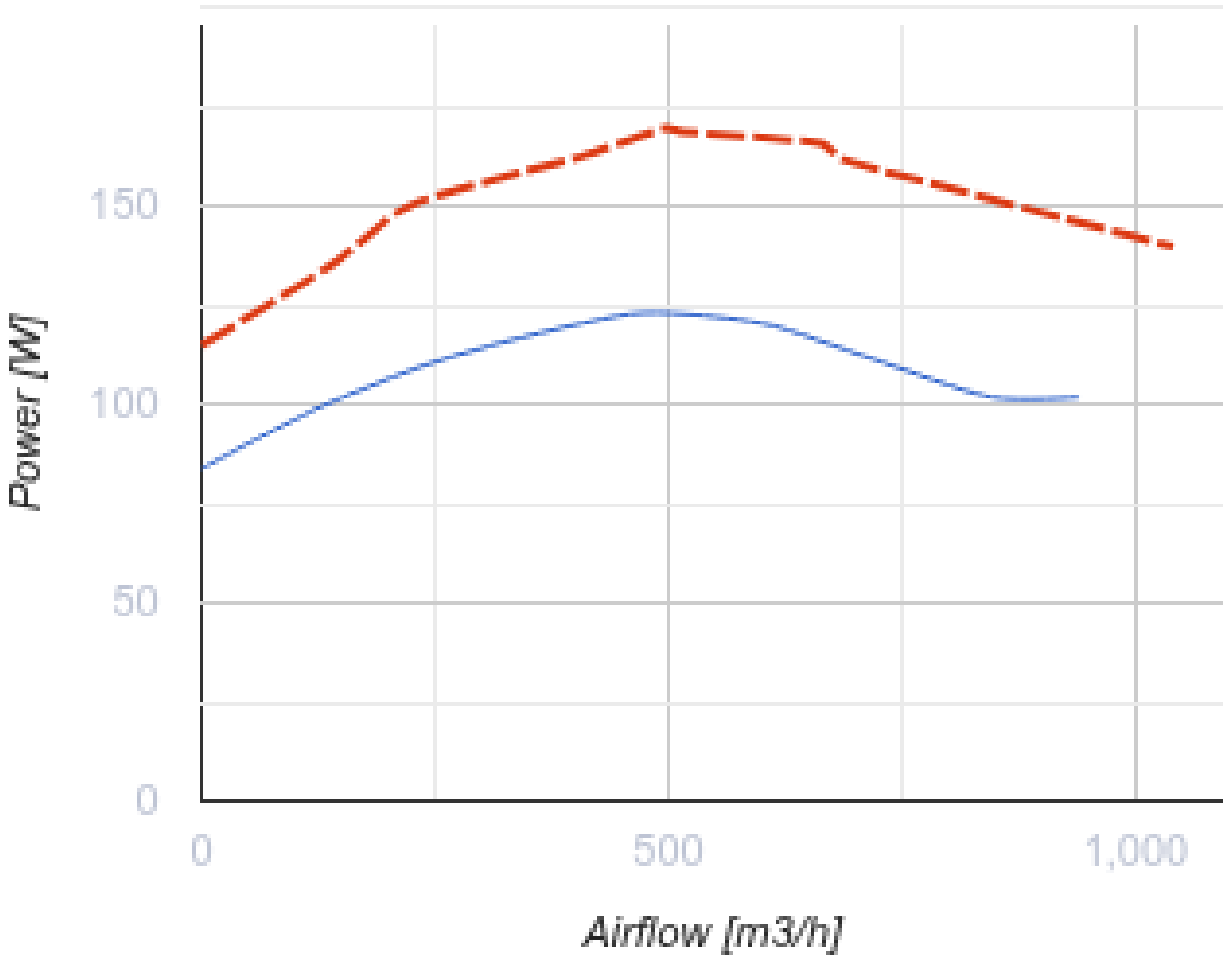

Dimensions

H	ØD	ØD1	L	L1
193	503	210	330	245

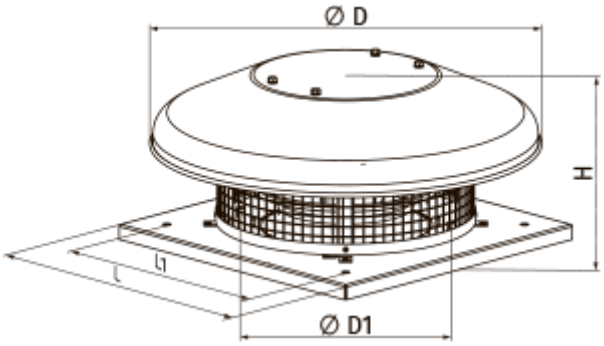

Accessories

Thyristor speed controllers

Name	Photo	Description
RS-3,0-T		Applied in ventilation systems for speed switching ON/OFF and speed control of single-phase power-controlled motors
RS-5,0-T		Applied in ventilation systems for speed switching ON/OFF and speed control of single-phase power-controlled motors
RS-10,0-T		Applied in ventilation systems for speed switching ON/OFF and speed control of single-phase power-controlled motors

Speed controllers

Name	Photo	Description
RSA5E-3,5-T		Speed controllers are applied for air flow control of single phase fans by means of motor step speed control
RSA5E-5,0-T		Speed controllers are applied for air flow control of single phase fans by means of motor step speed control
RSA5E-7,5-T		Speed controllers are applied for air flow control of single phase fans by means of motor step speed control
RSA5D-1,5-M		Three phase speed controller
RSA5D-2,5-M		Three phase speed controller
RSA5D-6,0-M		Three phase speed controller
RSA5D-8,0-M		Three phase speed controller
RSA5D-11,0-M		Three phase speed controller
RSA5D-12,0-M		Three phase speed controller

RSA5E-1,5-T		Speed controllers are applied for air flow control of single phase fans by means of motor step speed control

Accessories for roof fans

Name	Photo	Description
RKV 220-225		Mounting frame
RKVI 220-225		Mounting frame with thermal-insulating layer
FKV 220-225		Mating flange
GKV 220-225		Flexible connector
KKV 220-225		Backdraft damper