VKHC 280 EC

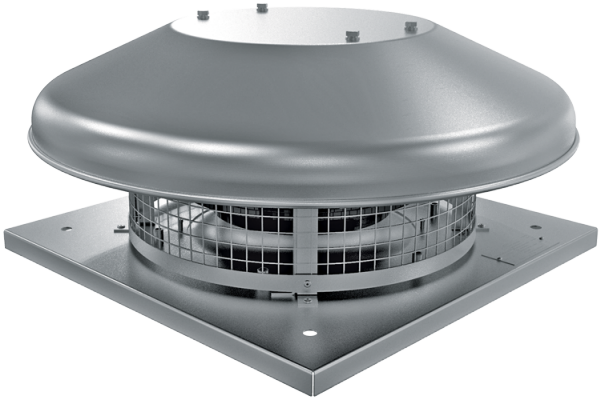

Roof centrifugal fans with EC-motors

• Sound pressure level LpA at 3 m: 48
• Impeller type: Centrifugal impeller with backward curved blades
• Casing material: Coated steel

	Unit of measurement	VKHC 280 EC
Phases	-	1
Maximum supply voltage	V	230
Minimum supply voltage	V	230
Power supply frequency	Hz	50/60
Rated power	W	195
Unit current	A	1.53
Maximum airflow	m^3/h	2400
Rotation speed at 50hz	-	2610
Sound pressure level LpA at 3 m	dB(A)	48
Weight	kg	10
Transported air temperature (max)	°C	60
Transported air temperature (min)	°C	-25
Ingress protection rating	-	IPX4
Ingress protection rating of the drive	-	IP55
Size	mm	280

Dimensions

H	ØD	ØD1	L	L1
254	623	285	420	330

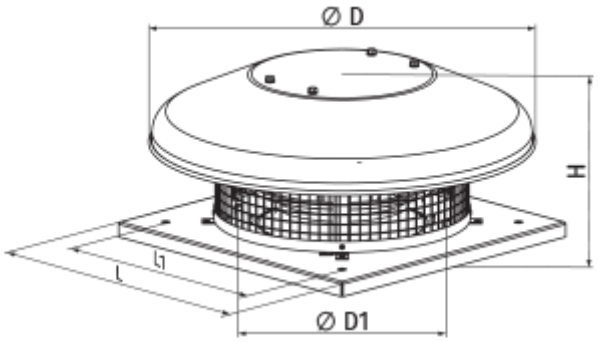

Accessories

Speed controllers

Name	Photo	Description
R-1/010		Speed controller for EC motors

Accessories for roof fans

Name	Photo	Description
RKV 250-315		Mounting frame
RKVI 250-315		Mounting frame with thermal-insulating layer
FKV 250-315		Mating flange
GKV 250-315		Flexible connector
KKV 250-315		Backdraft damper

Ecodesign

Trademark	Vents
Model	VKHC 280 EC
Type of drive installed	Integrated VSD
Type of heat recovery system	None
Nominal external pressure (Pa)	275
Maximum external leakage rates (%)	2.7
Static efficiency (%)	62
Sound power level (dB(A))	67
Declared typology	NRVU UVU
Effective electric power input (kW)	0.194