VKH 4E 310

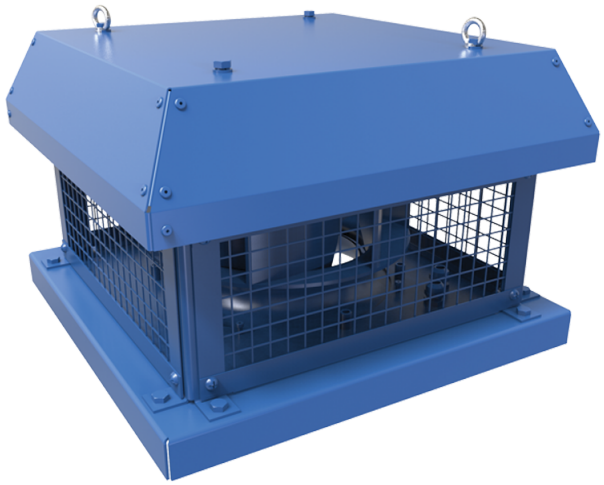

Roof centrifugal fans with horizontal air discharge

• Sound pressure level LpA at 3 m: 47
• Impeller type: Centrifugal impeller with backward curved blades
• Casing material: Coated steel

	Unit of measurement	VKH 4E 310
Phases	-	1
Minimum supply voltage	V	230
Maximum supply voltage	V	230
Power supply frequency	Hz	50/60
Rated power	W	141
Unit current	A	0.64
Maximum airflow	m^3/h	2265
Rotation speed at 50hz	-	1420
Sound pressure level LpA at 3 m	dB(A)	47
Weight	kg	14.2
Transported air temperature (max)	°C	50
Transported air temperature (min)	°C	-25
Ingress protection rating	-	IPX4
Ingress protection rating of the drive	-	IP54
Impeller material	-	Aluminium
Size	mm	310

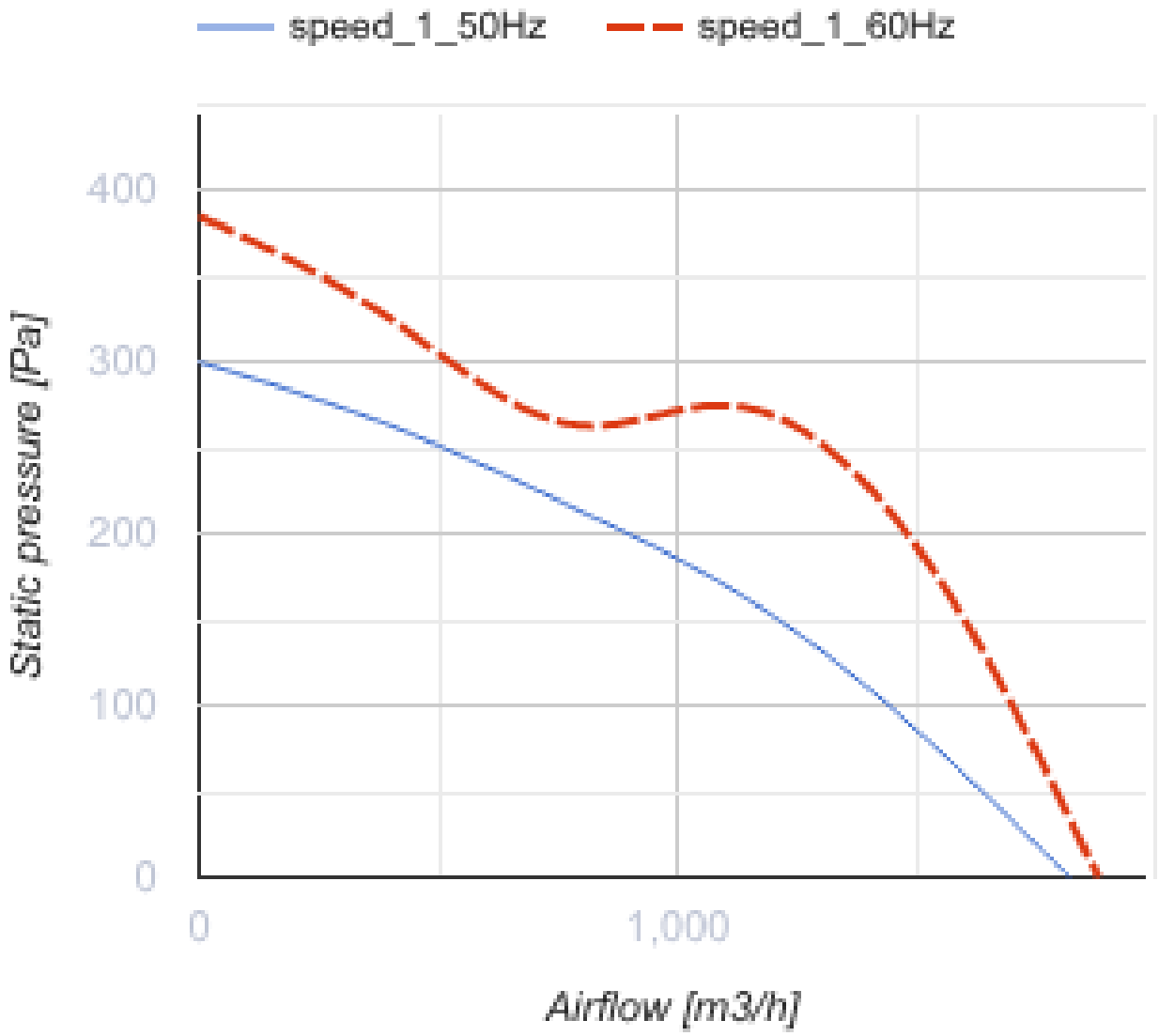
speed_1_50Hz
speed_1_60Hz
400
300
200
100
0
Static pressure [Pa]
0
1,000
Airflow [m3/h]

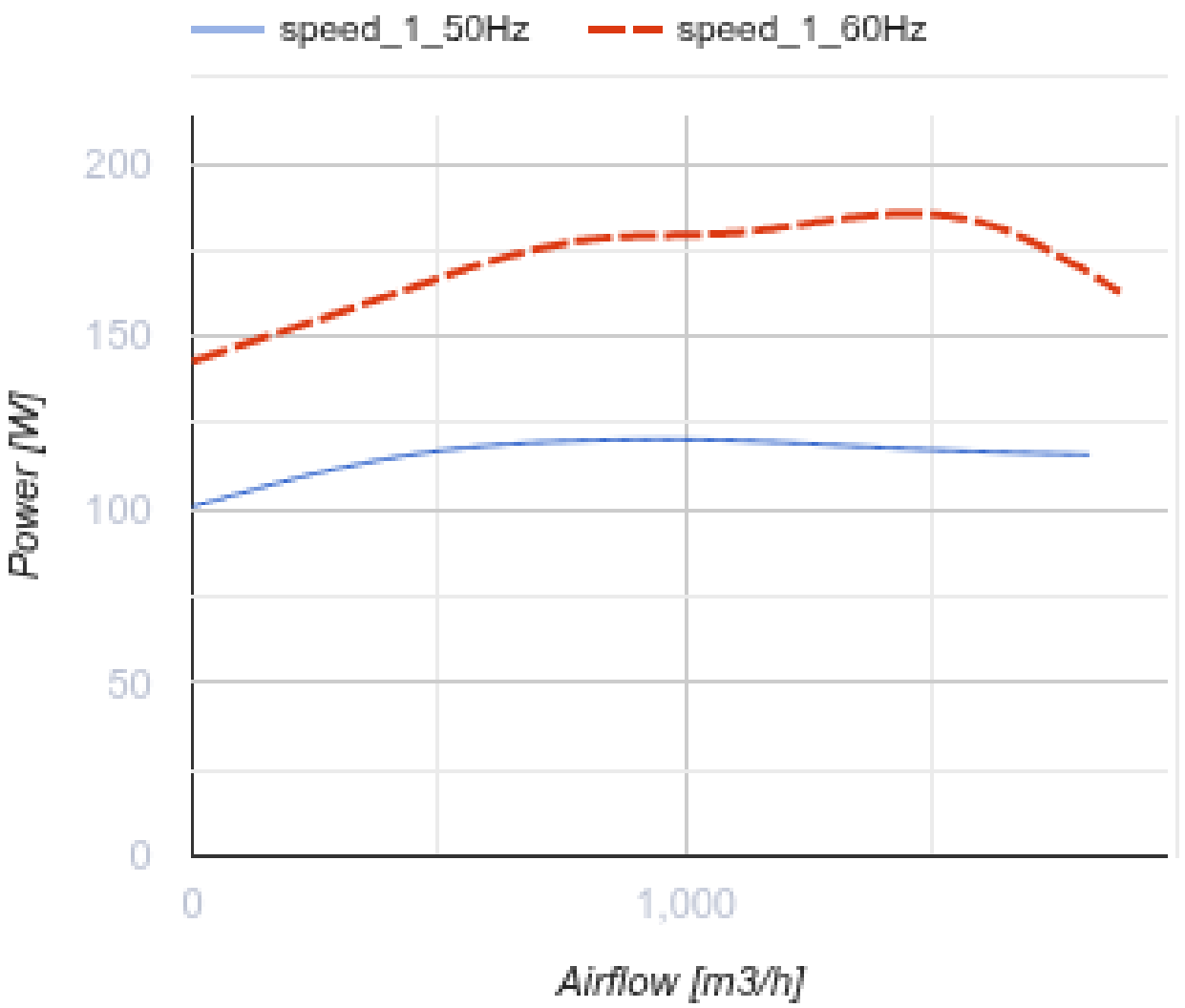

Dimensions

H	H1	A	B	C	Ød	ØD
287	294	451	450	330	11	285

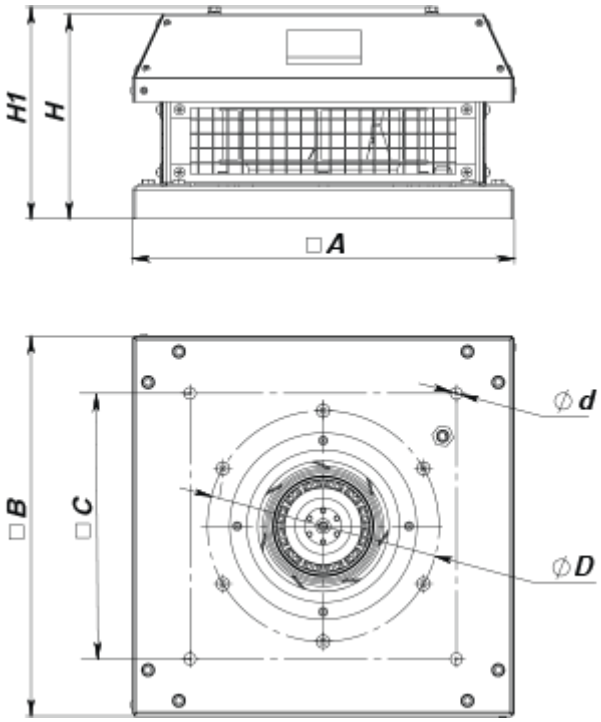

Accessories

Accessories for roof fans

Name	Photo	Description
RKV 250-315		Mounting frame
RKVI 250-315		Mounting frame with thermal-insulating layer
FKV 250-315		Mating flange
GKV 250-315		Flexible connector
KKV 250-315		Backdraft damper

Ecodesign

Trademark	Vents
Model	VKH 4E 310
Type of drive installed	External MSD or VSD
Type of heat recovery system	None
Nominal external pressure (Pa)	175
Maximum external leakage rates (%)	2.7
Static efficiency (%)	40.6
Declared typology	NRVU UVU
Effective electric power input (kW)	0.129
Sound power level (dB(A))	65