# VKH 4E 225

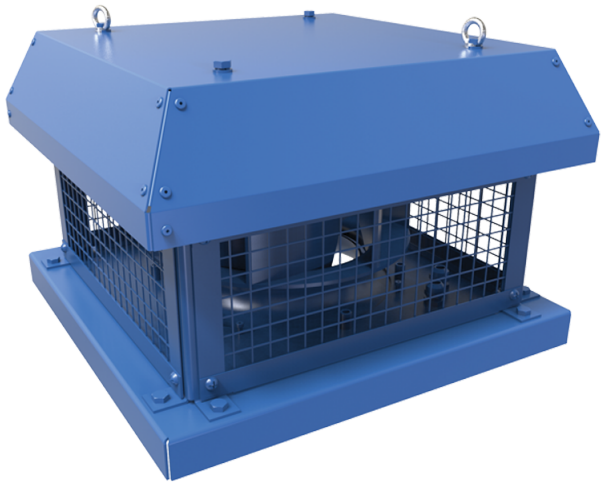

Roof centrifugal fans with horizontal air discharge

• Sound pressure level LpA at 3 m: 45
• Impeller type: Centrifugal impeller with backward curved blades
• Casing material: Coated steel

| | Unit of measurement | VKH 4E 225 |
|---|---|---|
| Phases | - | 1 |
| Minimum supply voltage | V | 230 |
| Maximum supply voltage | V | 230 |
| Power supply frequency | Hz | 50 |
| Rated power | W | 49 |
| Unit current | A | 0.22 |
| Maximum airflow | $m^3/h$ | 738 |
| Rotation speed at 50hz | - | 1400 |
| Sound pressure level LpA at 3 m | dB(A) | 45 |
| Weight | kg | 9 |
| Transported air temperature (max) | °C | 50 |
| Transported air temperature (min) | °C | -25 |
| Ingress protection rating | - | IPX4 |
| Ingress protection rating of the drive | - | IP44 |
| Impeller material | - | Plastic |
| Size | mm | 225 |

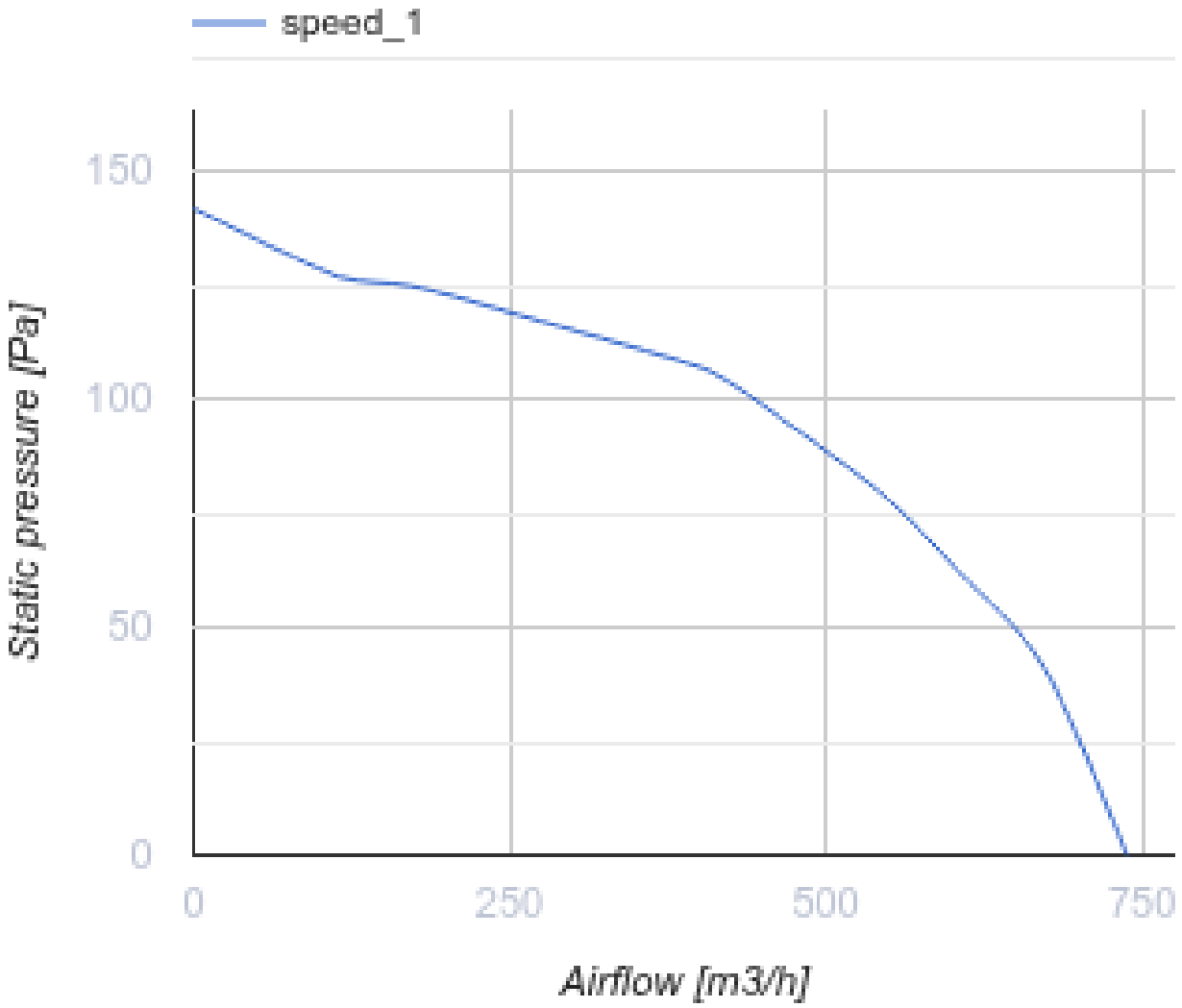
speed_1
150
100
50
0
Static pressure [Pa]
0
250
500
750
Airflow [m3/h]

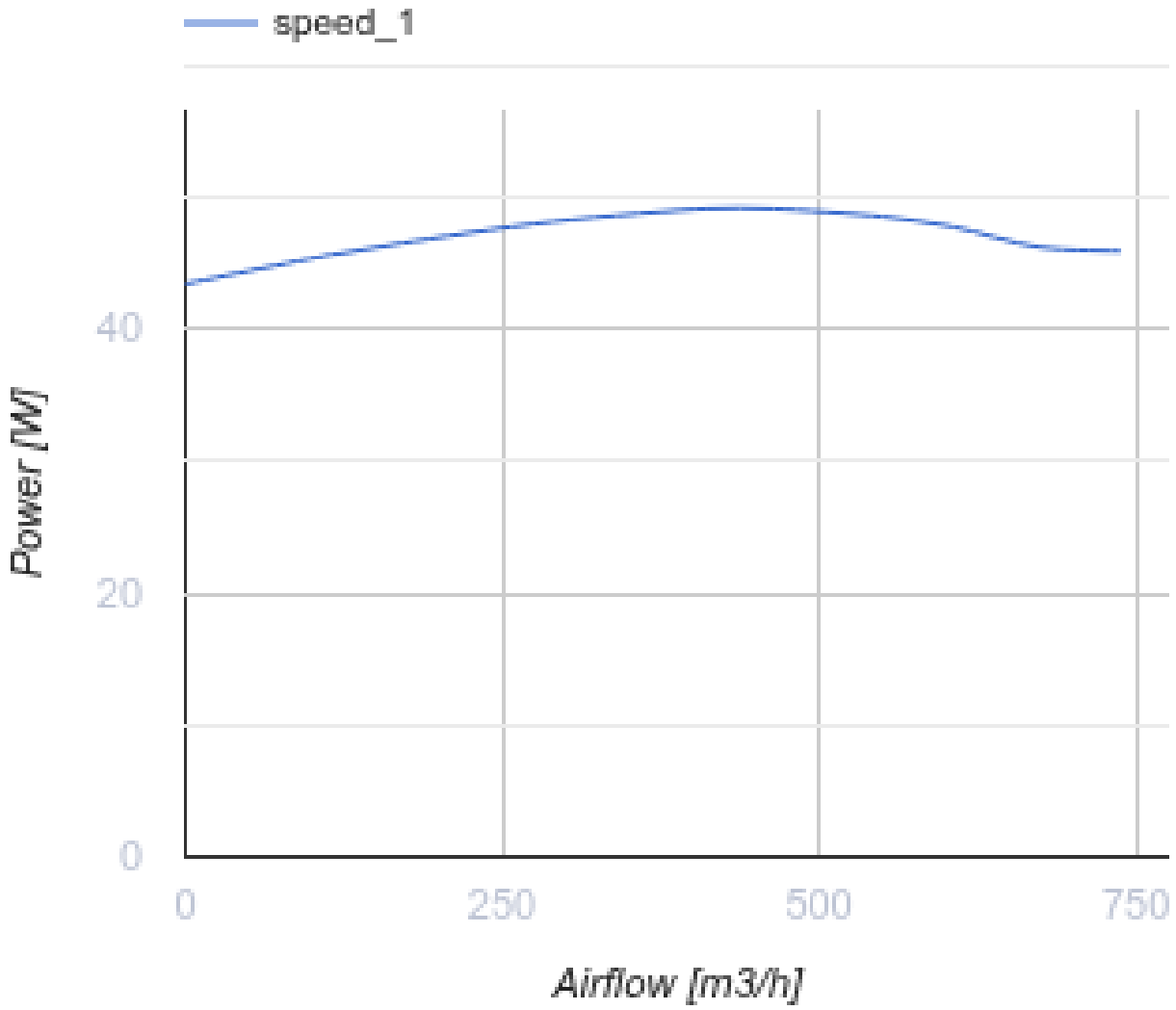


## Dimensions

| H | H1 | A | B | C | Ød | ØD |
|---|---|---|---|---|---|---|
| 233 | 240 | 351 | 350 | 245 | 11 | 210 |

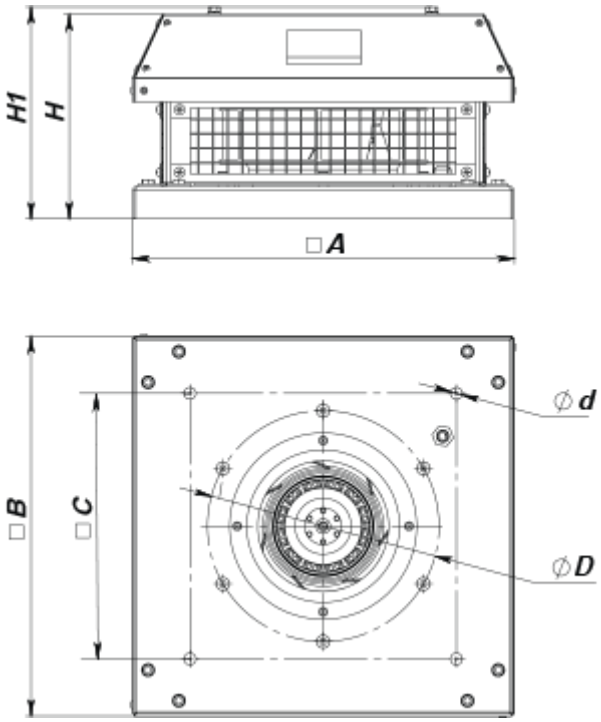


## Accessories

### Accessories for roof fans

| Name | Photo | Description |
|---|---|---|
| RKV 220-225 |  | Mounting frame |
| RKVI 220-225 |  | Mounting frame with thermal-insulating layer |
| FKV 220-225 |  | Mating flange |
| GKV 220-225 |  | Flexible connector |
| KKV 220-225 |  | Backdraft damper |