VKH 2E 250

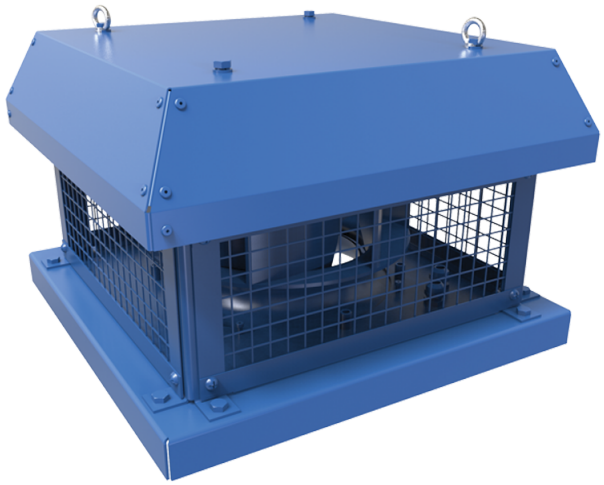

Roof centrifugal fans with horizontal air discharge

• Sound pressure level LpA at 3 m: 54
• Impeller type: Centrifugal impeller with backward curved blades
• Casing material: Coated steel

	Unit of measurement	VKH 2E 250
Phases	-	1
Maximum supply voltage	V	230
Minimum supply voltage	V	230
Power supply frequency	Hz	50/60
Rated power	W	184
Unit current	A	0.81
Maximum airflow	m^3/h	1450
Rotation speed at 50hz	-	2480
Sound pressure level LpA at 3 m	dB(A)	54
Weight	kg	12.7
Transported air temperature (max)	°C	50
Transported air temperature (min)	°C	-25
Ingress protection rating	-	IPX4
Ingress protection rating of the drive	-	IP44
Impeller material	-	Plastic
Size	mm	250

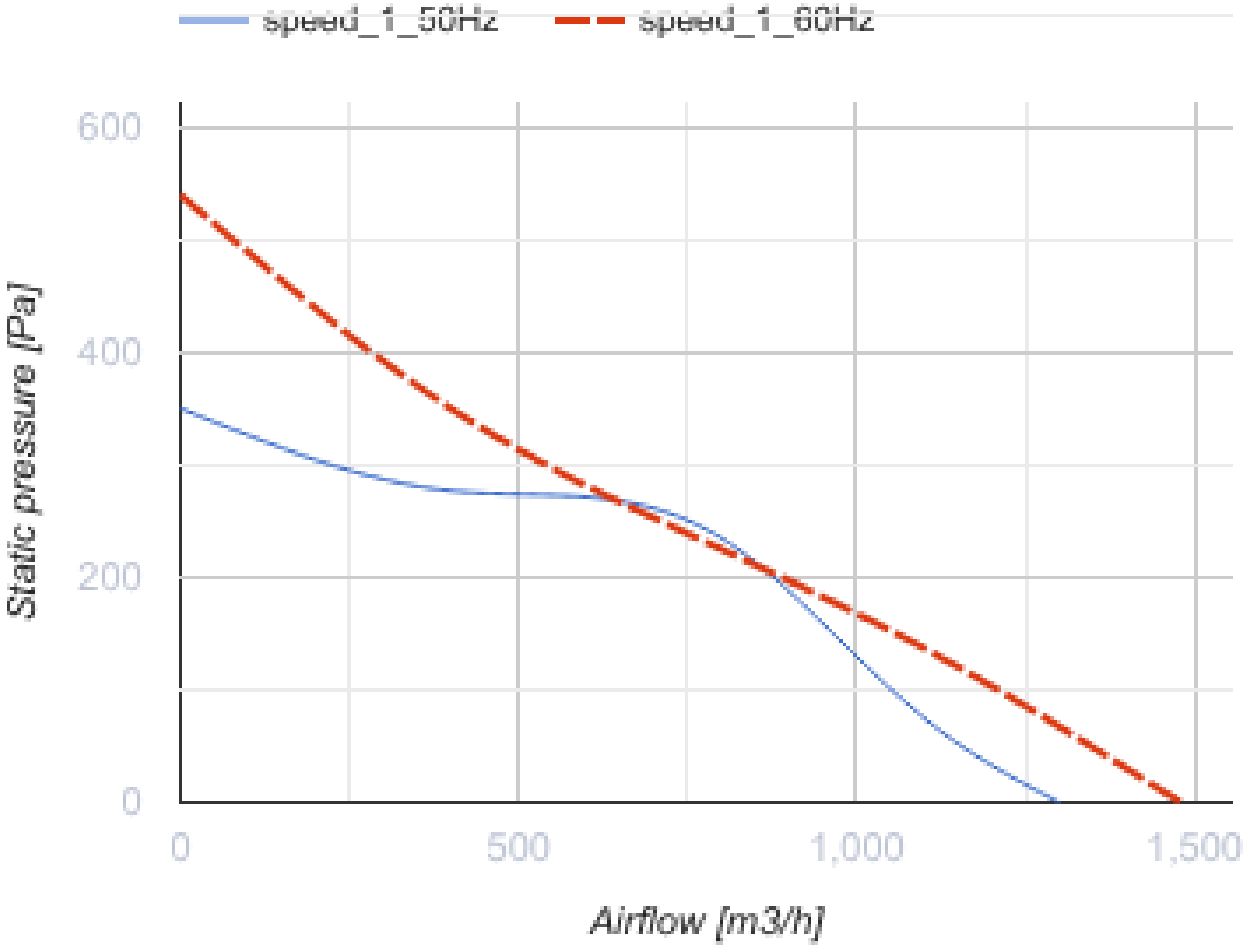
speed_1_50Hz
speed_1_60Hz
600
400
200
0
Static pressure [Pa]
0
500
1,000
1,500
Airflow [m3/h]

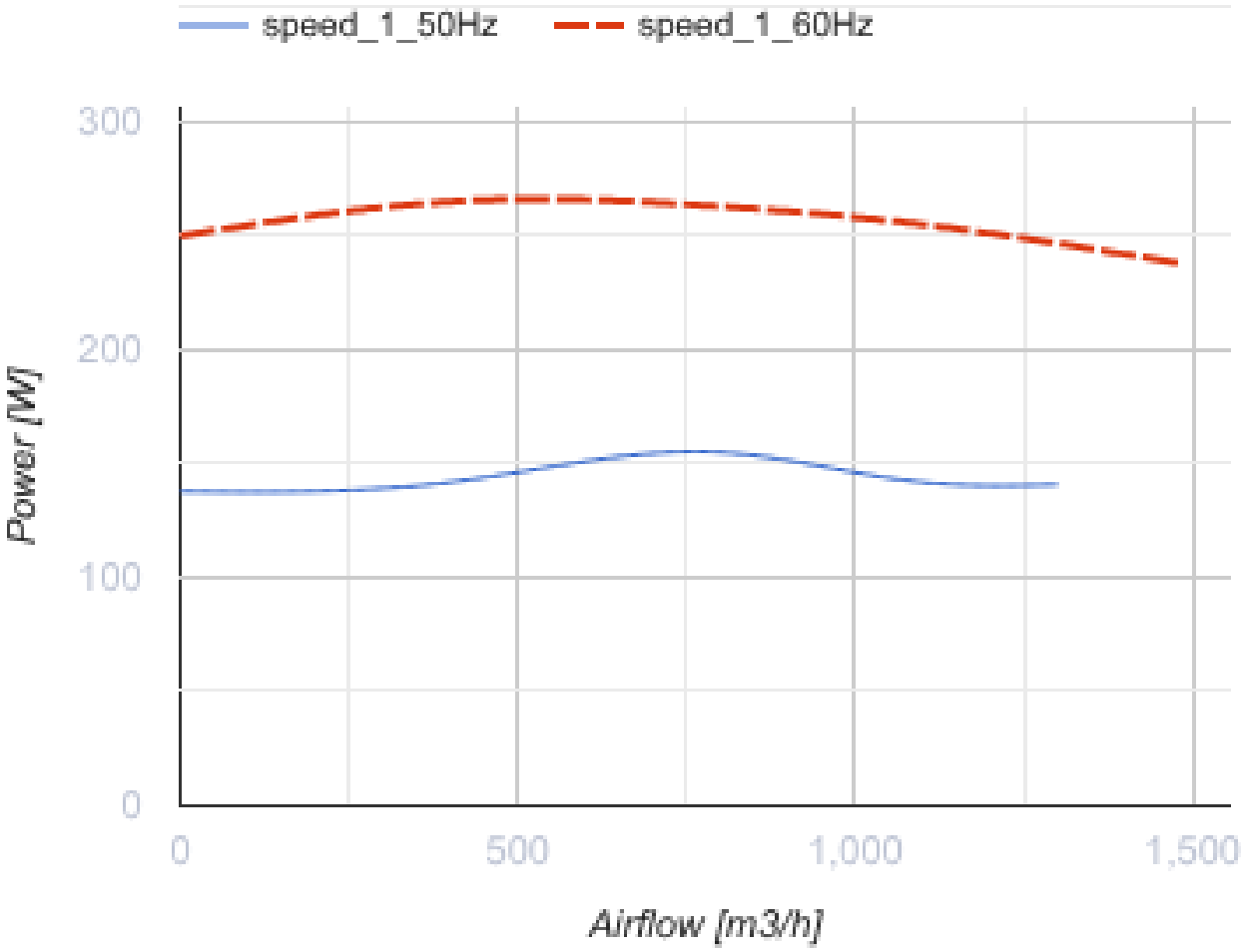

Dimensions

H	H1	A	B	C	Ød	ØD
237	244	451	450	330	11	285

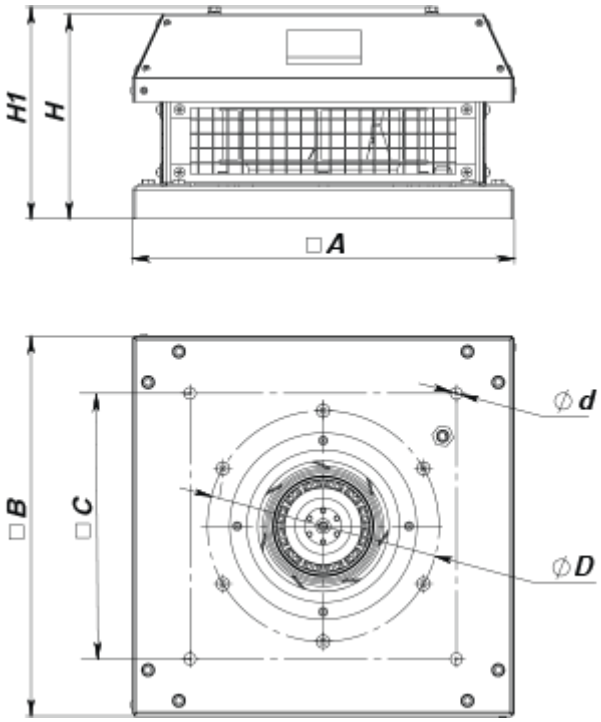

Accessories

Accessories for roof fans

Name	Photo	Description
RKV 250-315		Mounting frame
RKVI 250-315		Mounting frame with thermal-insulating layer
FKV 250-315		Mating flange
GKV 250-315		Flexible connector
KKV 250-315		Backdraft damper

Ecodesign

Trademark	Vents
Model	VKH 2E 250
Type of drive installed	External MSD or VSD
Type of heat recovery system	None
Nominal external pressure (Pa)	211
Maximum external leakage rates (%)	2.7
Static efficiency (%)	20.1
Effective electric power input (kW)	0.208
Sound power level (dB(A))	85
Declared typology	NRVU UVU