VKH 2E 190

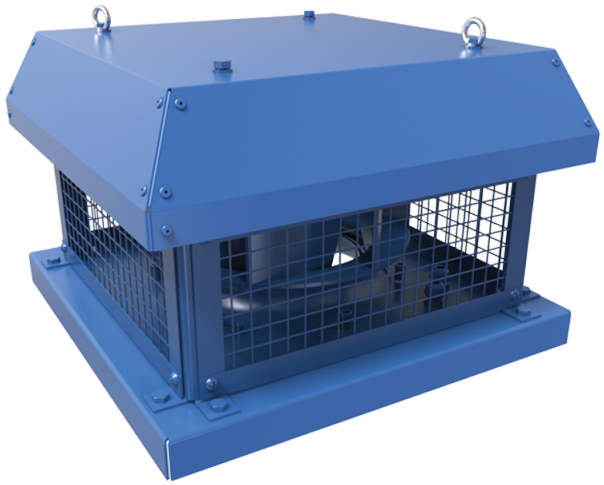

Roof centrifugal fans with horizontal air discharge

• Sound pressure level LpA at 3 m: 48
• Impeller type: Centrifugal impeller with backward curved blades
• Casing material: Coated steel

	Unit of measurement	VKH 2E 190
Phases	-	1
Minimum supply voltage	V	230
Maximum supply voltage	V	230
Power supply frequency	Hz	50/60
Rated power	W	69
Unit current	A	0.3
Maximum airflow	m^3/h	610
Rotation speed at 50hz	-	2680
Sound pressure level LpA at 3 m	dB(A)	48
Weight	kg	8
Transported air temperature (max)	°C	50
Transported air temperature (min)	°C	-25
Ingress protection rating	-	IPX4
Ingress protection rating of the drive	-	IP44
Impeller material	-	Plastic
Size	mm	190

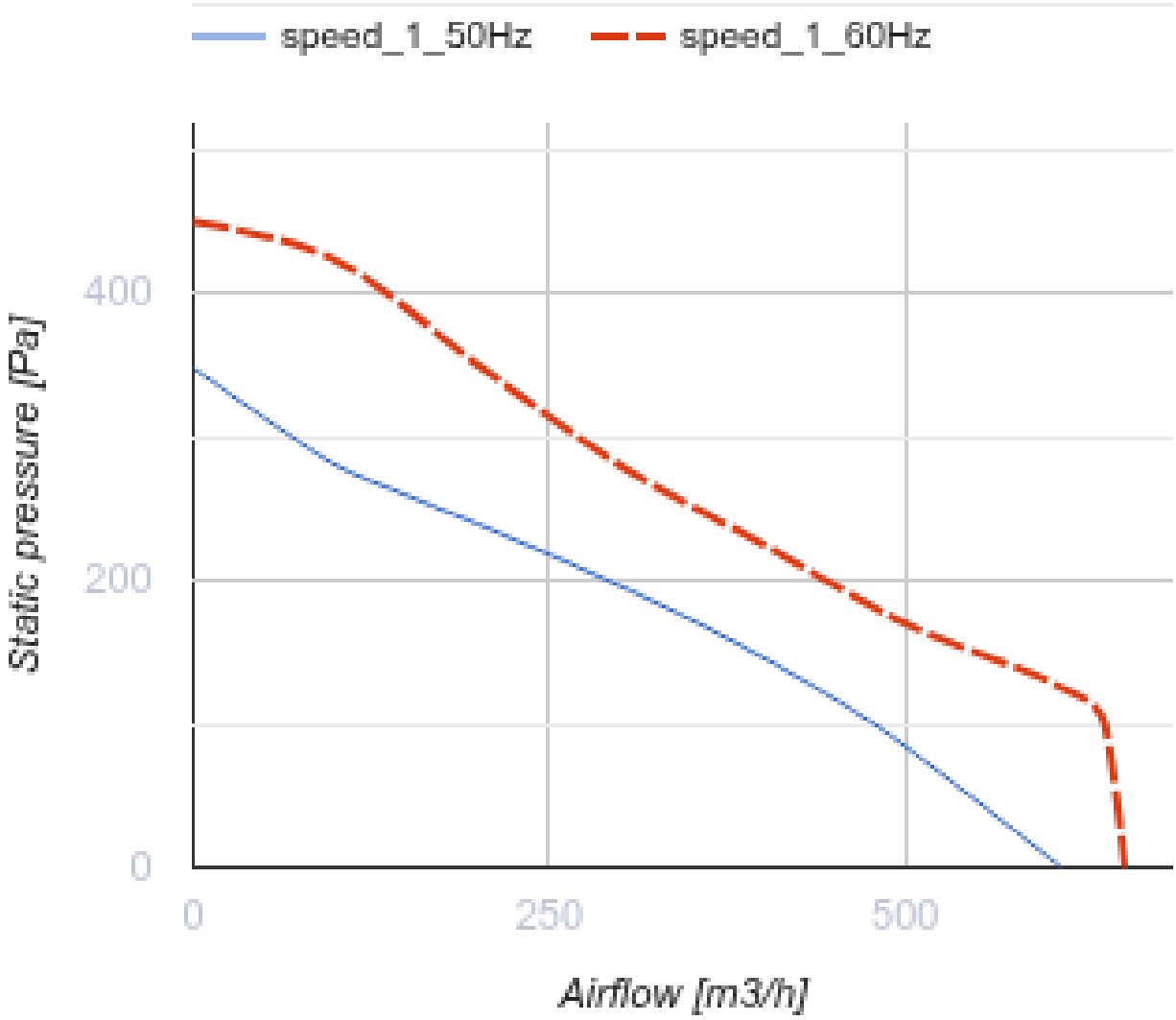
speed_1_50Hz
speed_1_60Hz
Static pressure [Pa]
400
200
0
0
250
500
Airflow [m3/h]

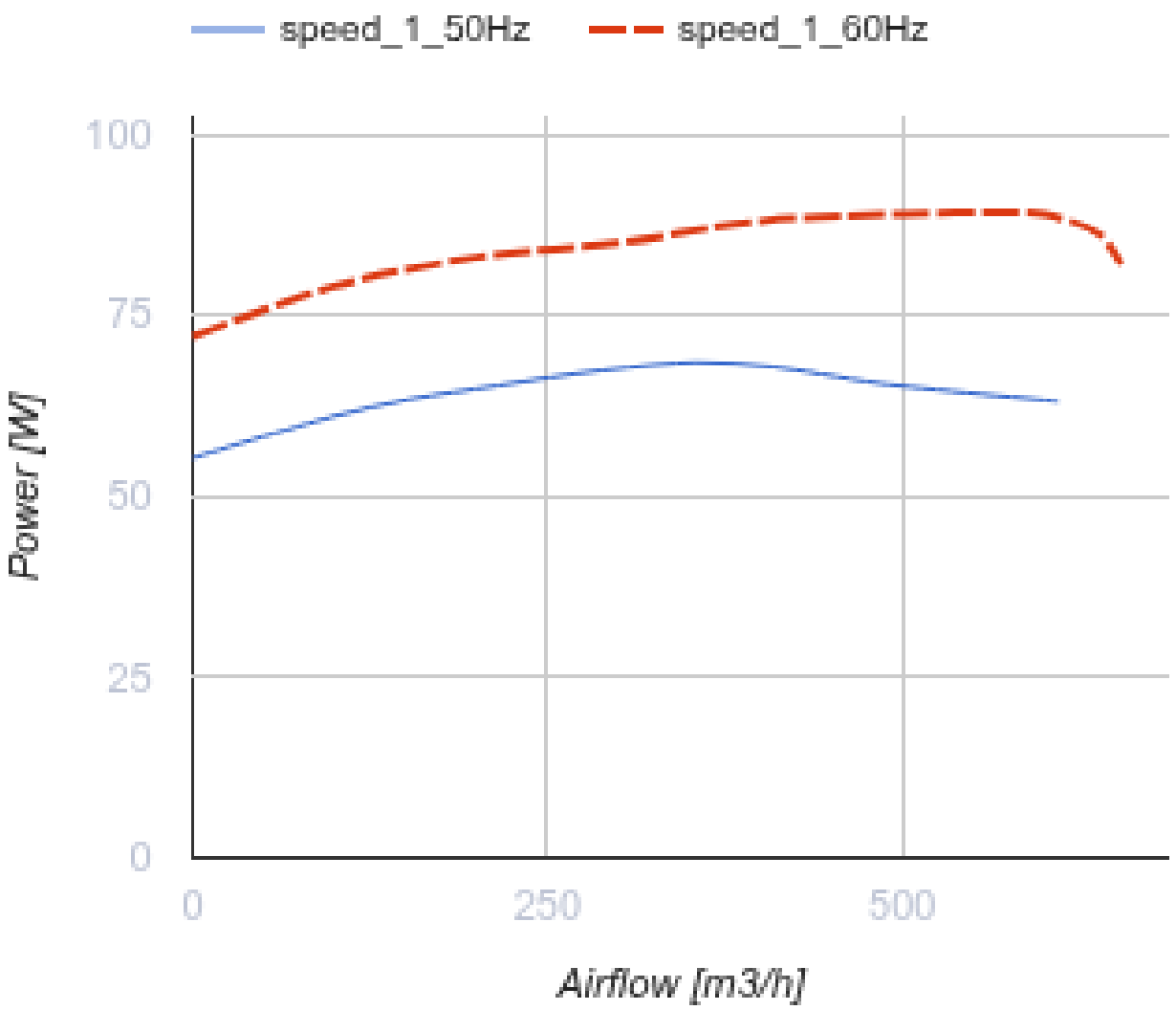

Dimensions

H	H1	A	B	C	Ød	ØD
189	195	351	350	245	11	213

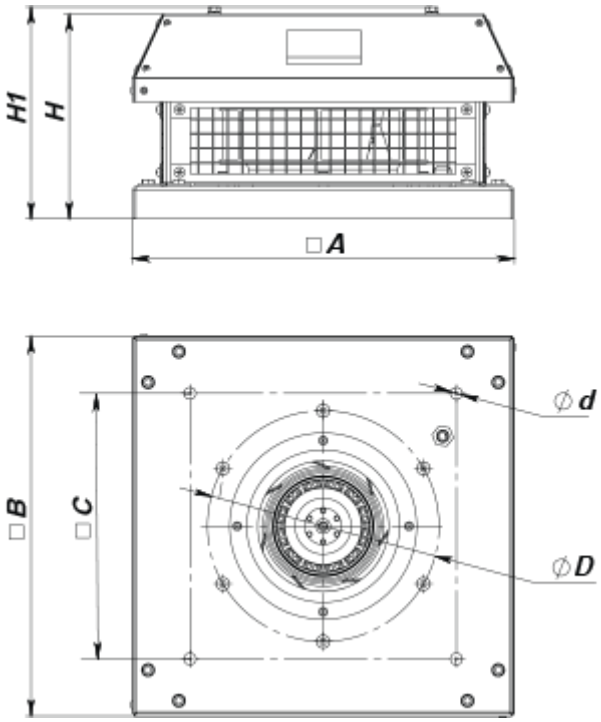

Accessories

Accessories for roof fans

Name	Photo	Description
RKV 220-225		Mounting frame
RKVI 220-225		Mounting frame with thermal-insulating layer
FKV 220-225		Mating flange
GKV 220-225		Flexible connector
KKV 220-225		Backdraft damper