VKF 6E 630



Inline axial fans

- Sound pressure level LpA at 3 m: 59
- Impeller type: Axial
- Casing material: Coated steel
- Installation in any position

	Unit of measurement	VKF 6E 630
Phases	-	1
Maximum supply voltage	V	240
Minimum supply voltage	V	220
Power supply frequency	Hz	50
Rated power	W	540
Unit current	A	2.4
Maximum airflow	m³/h	10900
Sound pressure level LpA at 3 m	dB(A)	59
Weight	kg	16.4
Transported air temperature (max)	°C	60
Transported air temperature (min)	°C	-30
Ingress protection rating	-	IPX4
Ingress protection rating of the drive	-	IP54
Impeller material	-	Coated steel

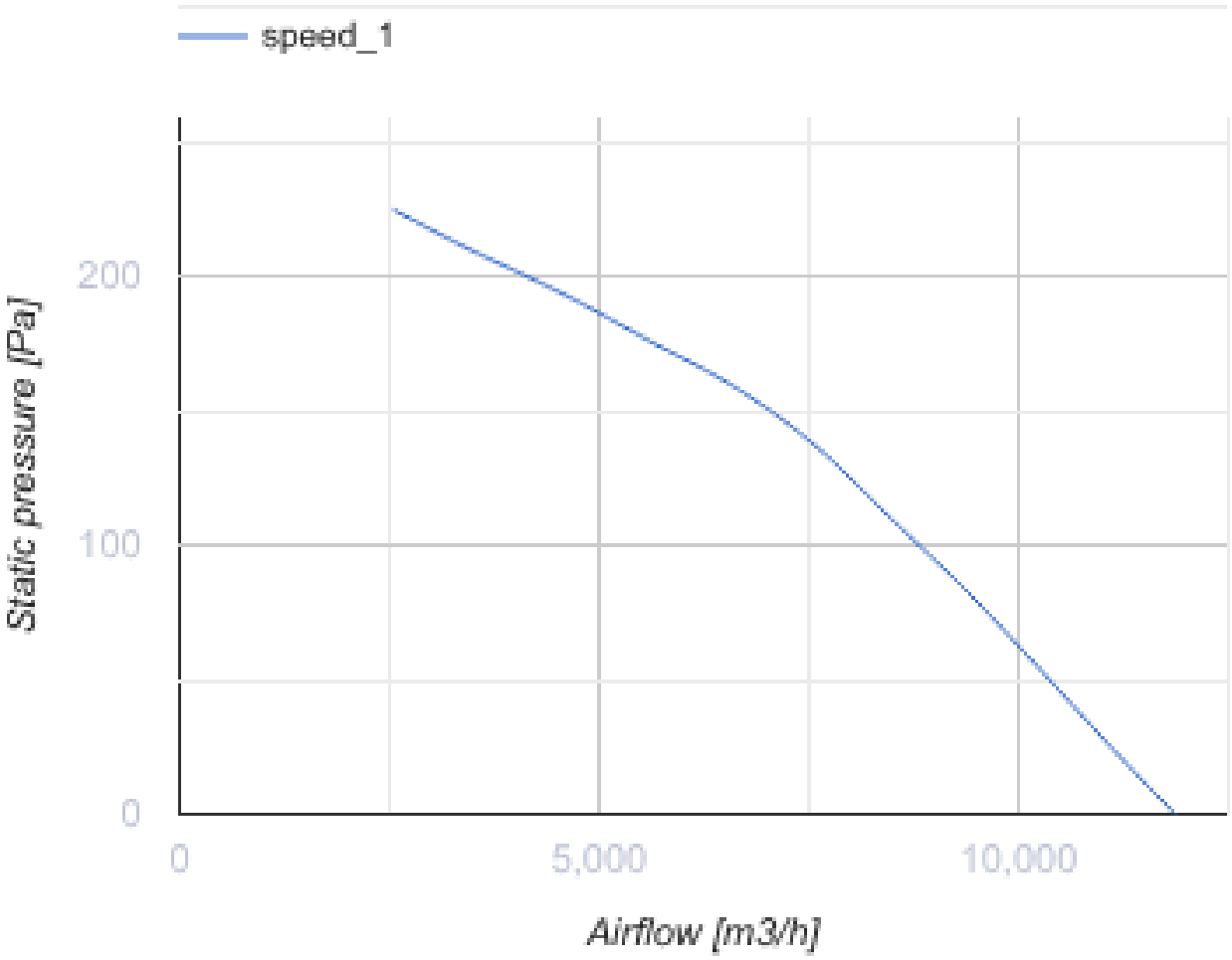
speed_1
Static pressure [Pa]
200
100
0
0
5,000
10,000
Airflow [m3/h]

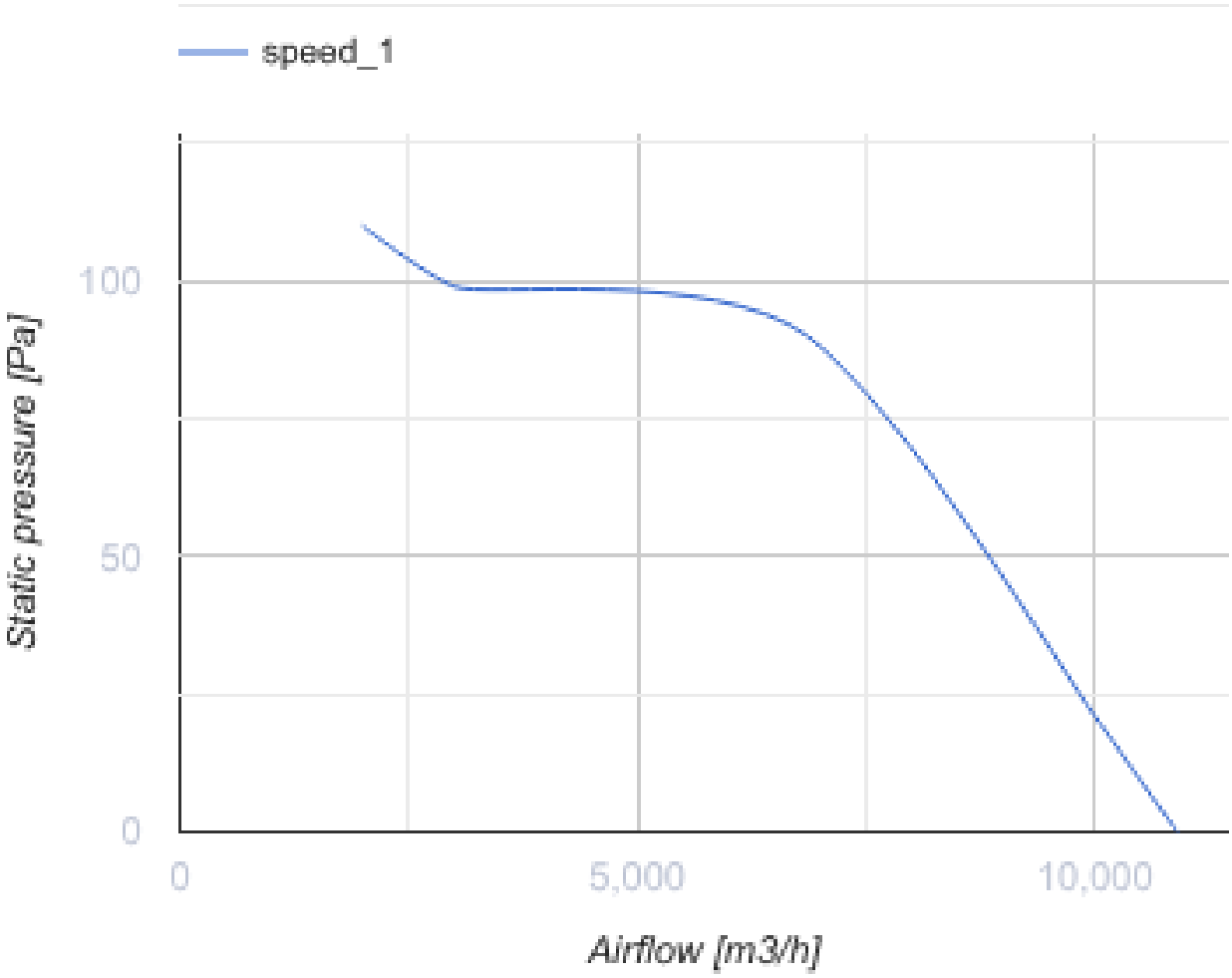
speed_1
100
50
0
Static pressure [Pa]
0
5,000
10,000
Airflow [m3/h]

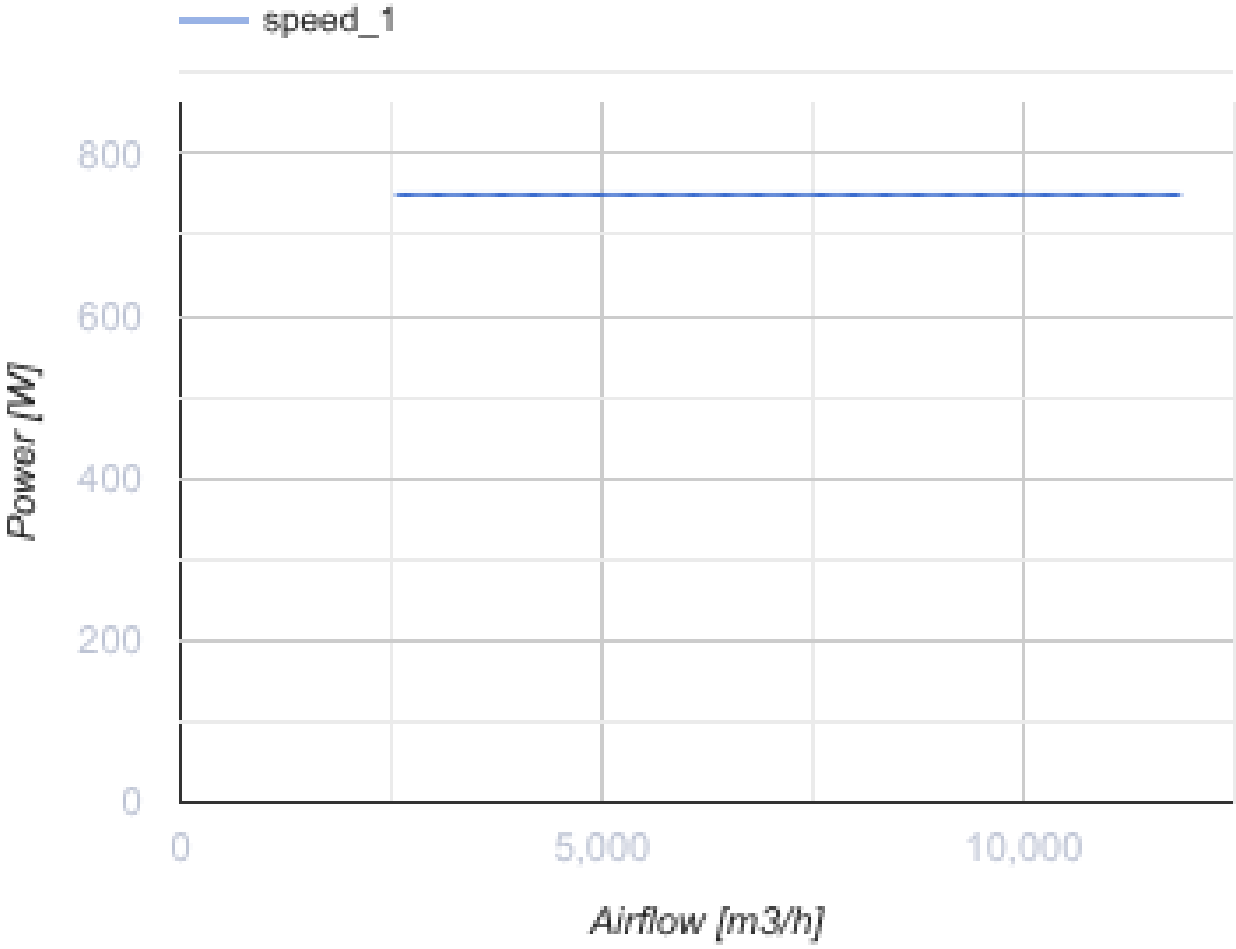

Dimensions

ØD	ØD1	ØD2	Ød	B	L
645	674	715	11,5	740	250

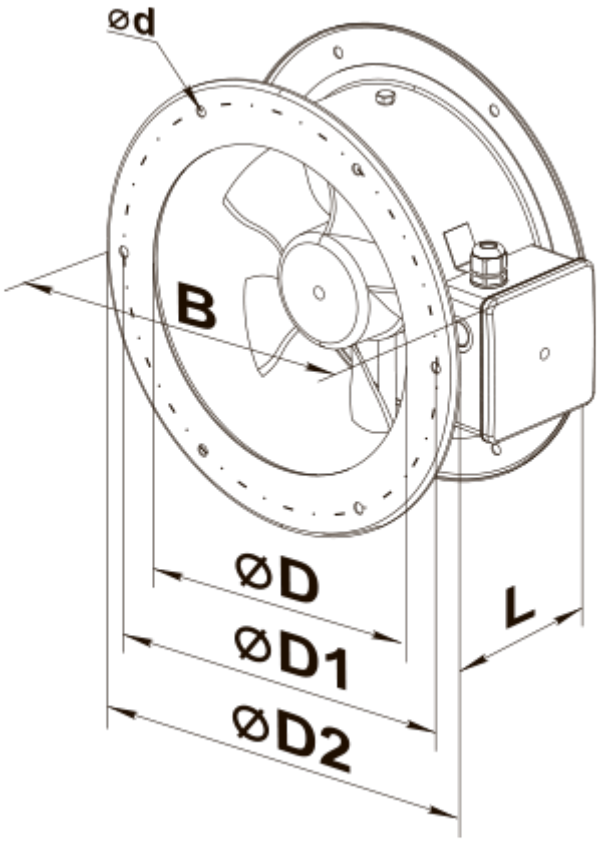
ød
B
øD
øD1
øD2
L

Ecodesign

Trademark	Vents
Model	VKF 6E 630
Type of drive installed	External MSD or VSD
Type of heat recovery system	None
Nominal external pressure (Pa)	90
Maximum external leakage rates (%)	2.7
Static efficiency (%)	35
Sound power level (dB(A))	92
Effective electric power input (kW)	0.5
Declared typology	NRVU UVU