VKF 6E 550



Inline axial fans

- Sound pressure level LpA at 3 m: 58
- Impeller type: Axial
- Casing material: Coated steel
- Installation in any position

	Unit of measurement	VKF 6E 550
Phases	-	1
Maximum supply voltage	V	240
Minimum supply voltage	V	220
Power supply frequency	Hz	50
Rated power	W	330
Unit current	A	1.6
Maximum airflow	m^3/h	6400
Sound pressure level LpA at 3 m	dB(A)	58
Weight	kg	13.9
Transported air temperature (max)	°C	60
Transported air temperature (min)	°C	-30
Ingress protection rating	-	IPX4
Ingress protection rating of the drive	-	IP54
Impeller material	-	Coated steel

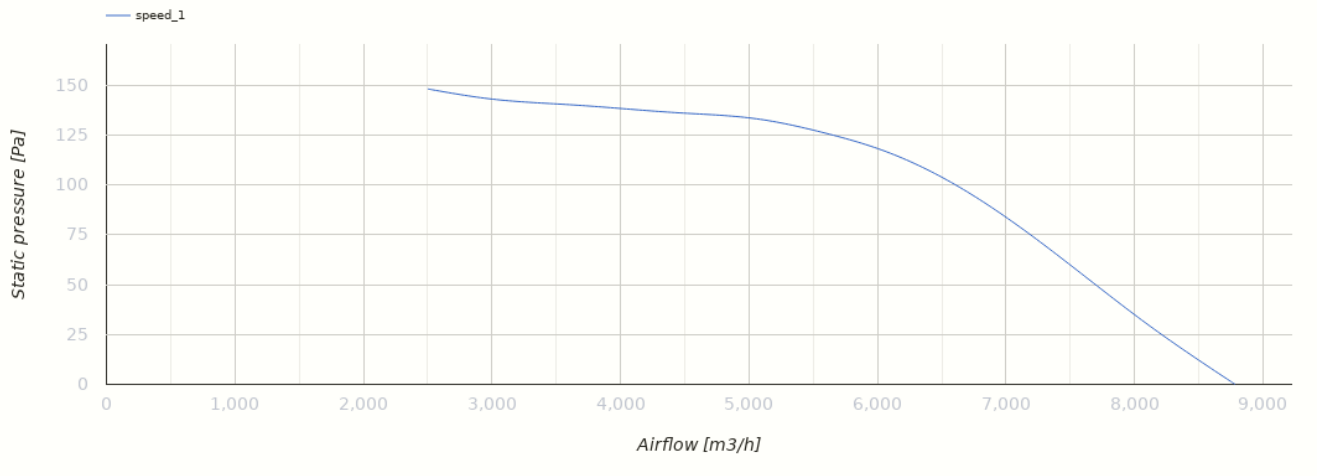
speed_1
Static pressure [Pa]
150
125
100
75
50
25
0
0
1,000
2,000
3,000
4,000
5,000
6,000
7,000
8,000
9,000
Airflow [m3/h]

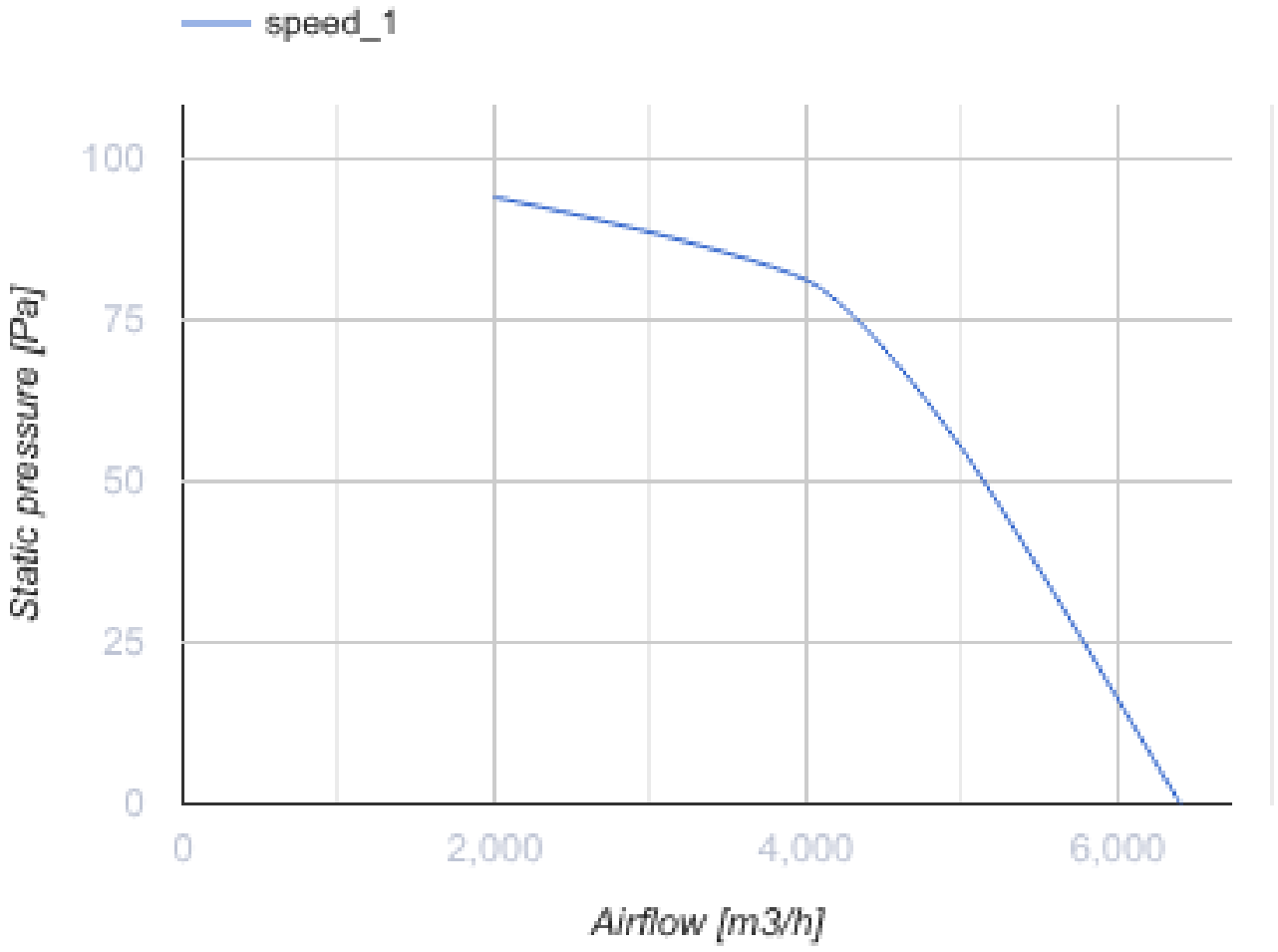
speed_1
Static pressure [Pa]
100
75
50
25
0
0
2,000
4,000
6,000
Airflow [m3/h]

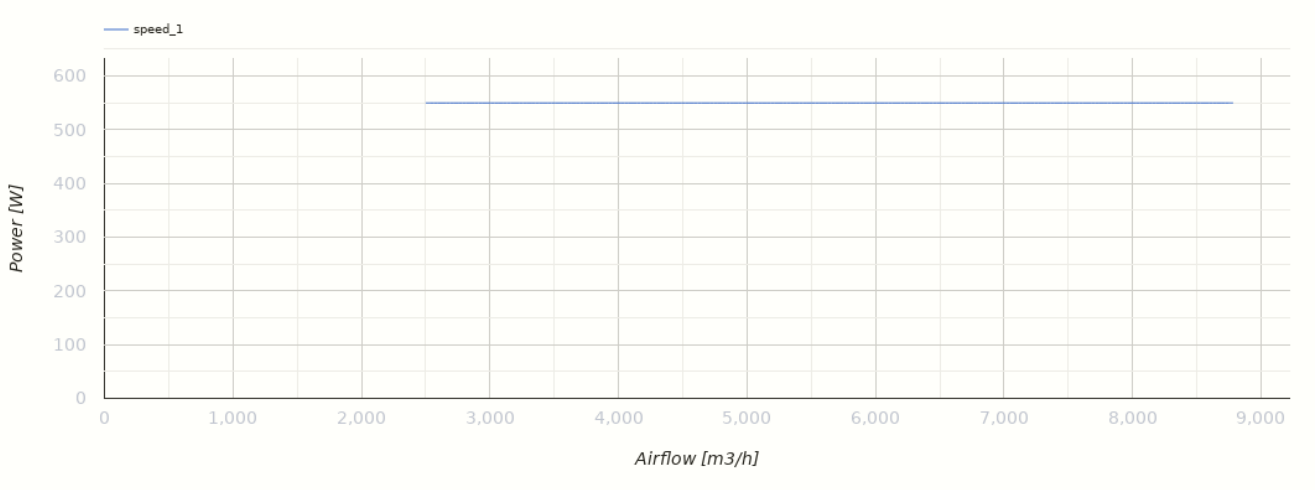

Dimensions

ØD	ØD1	ØD2	Ød	B	L
565	605	636	11,5	660	230

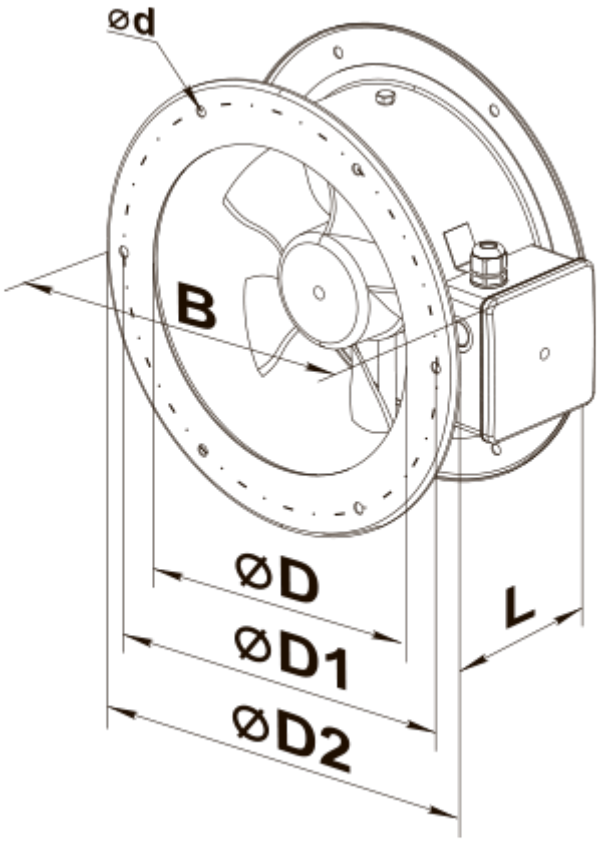

Ecodesign

Trademark	Vents
Model	VKF 6E 550
Type of drive installed	External MSD or VSD
Type of heat recovery system	None
Nominal external pressure (Pa)	120
Maximum external leakage rates (%)	2.7
Static efficiency (%)	34.7
Sound power level (dB(A))	90
Effective electric power input (kW)	0.581
Declared typology	NRVU UVU