VKF 6E 500



Inline axial fans

- Sound pressure level LpA at 3 m: 56
- Impeller type: Axial
- Casing material: Coated steel
- Installation in any position

	Unit of measurement	VKF 6E 500
Phases	-	1
Maximum supply voltage	V	240
Minimum supply voltage	V	220
Power supply frequency	Hz	50
Rated power	W	220
Unit current	A	1.1
Maximum airflow	m^3/h	4880
Sound pressure level LpA at 3 m	dB(A)	56
Weight	kg	11
Transported air temperature (max)	°C	60
Transported air temperature (min)	°C	-30
Ingress protection rating	-	IPX4
Ingress protection rating of the drive	-	IP54
Impeller material	-	Coated steel

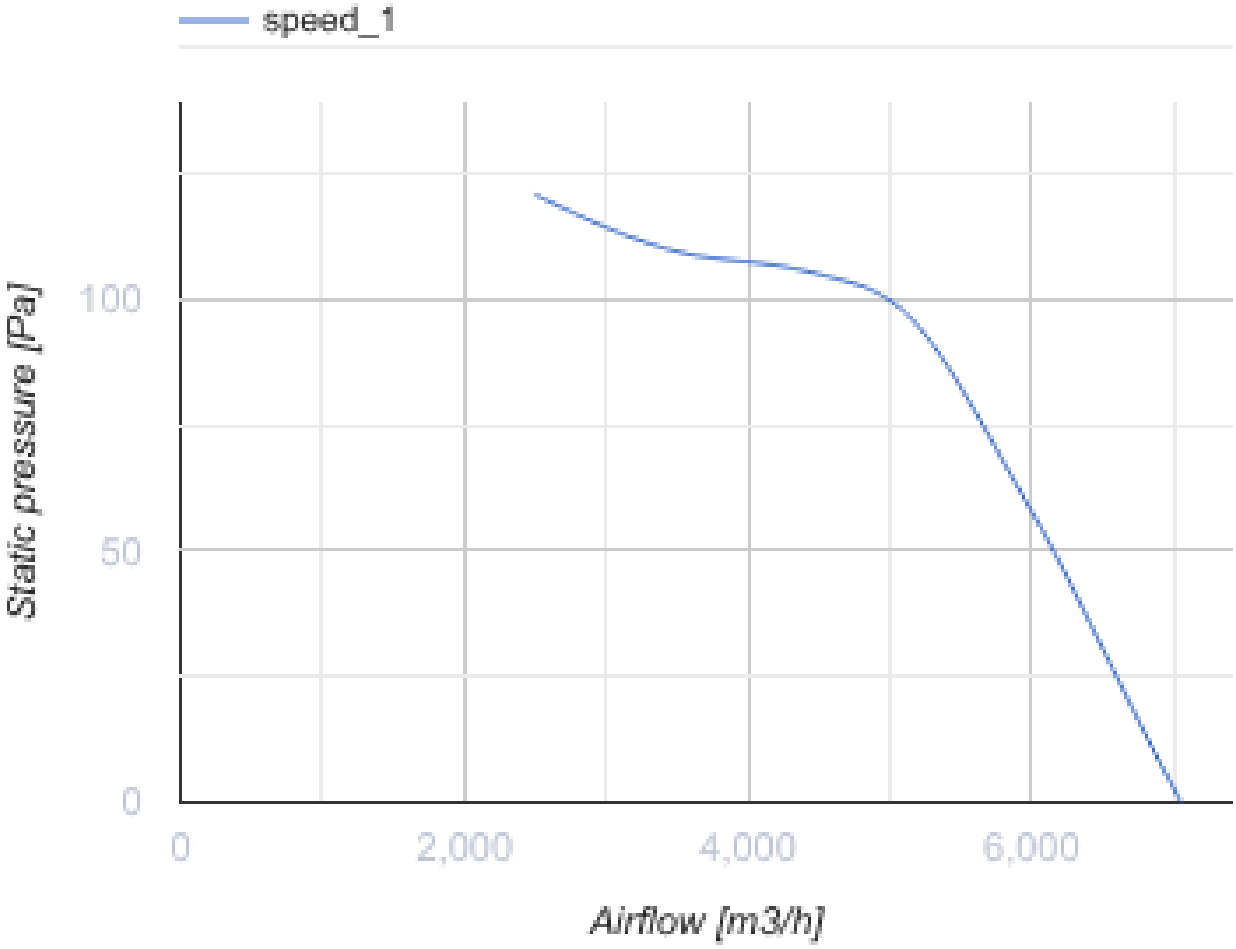
speed_1
Static pressure [Pa]
100
50
0
0
2,000
4,000
6,000
Airflow [m3/h]

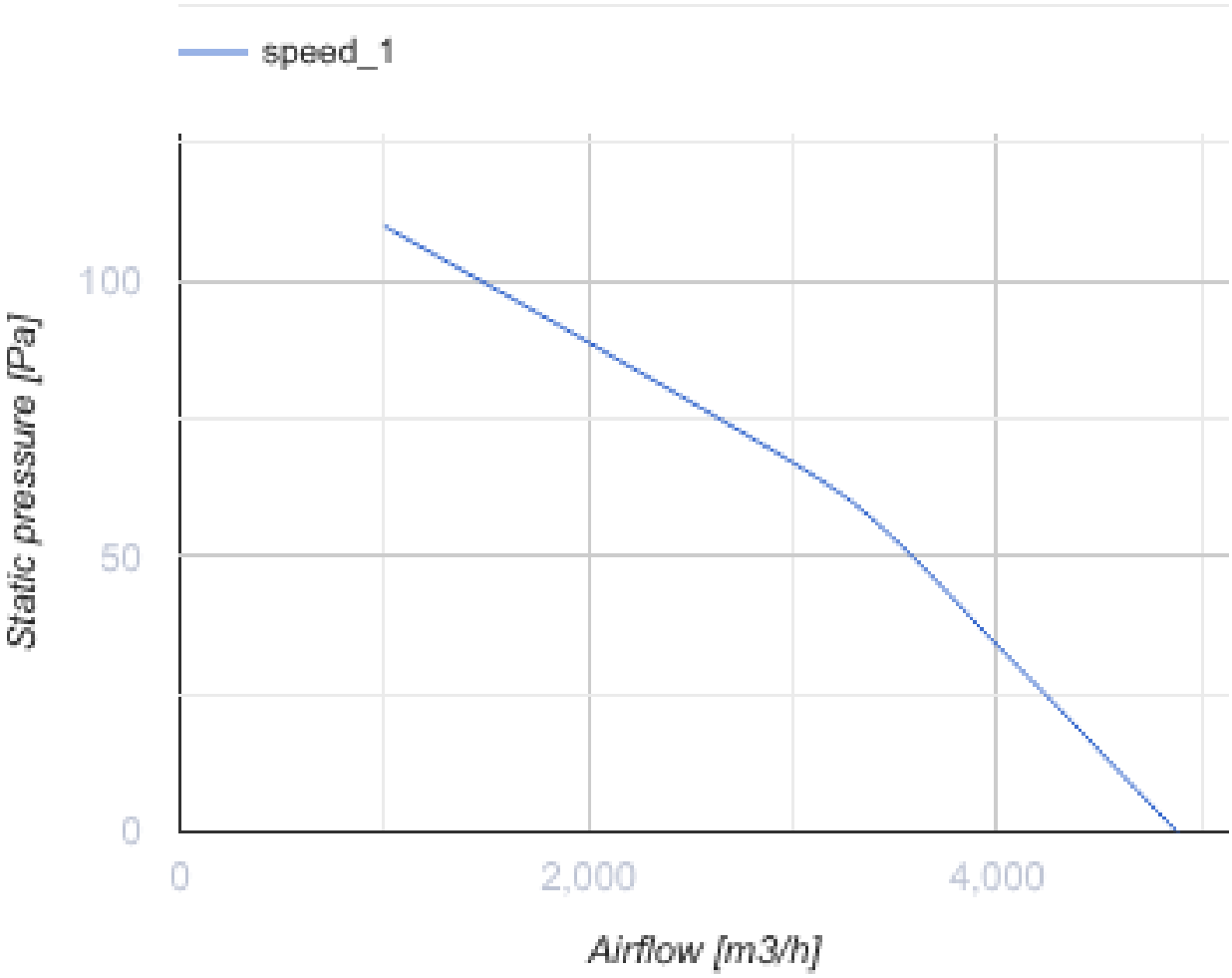
speed_1
100
50
0
Static pressure [Pa]
0
2,000
4,000
Airflow [m3/h]

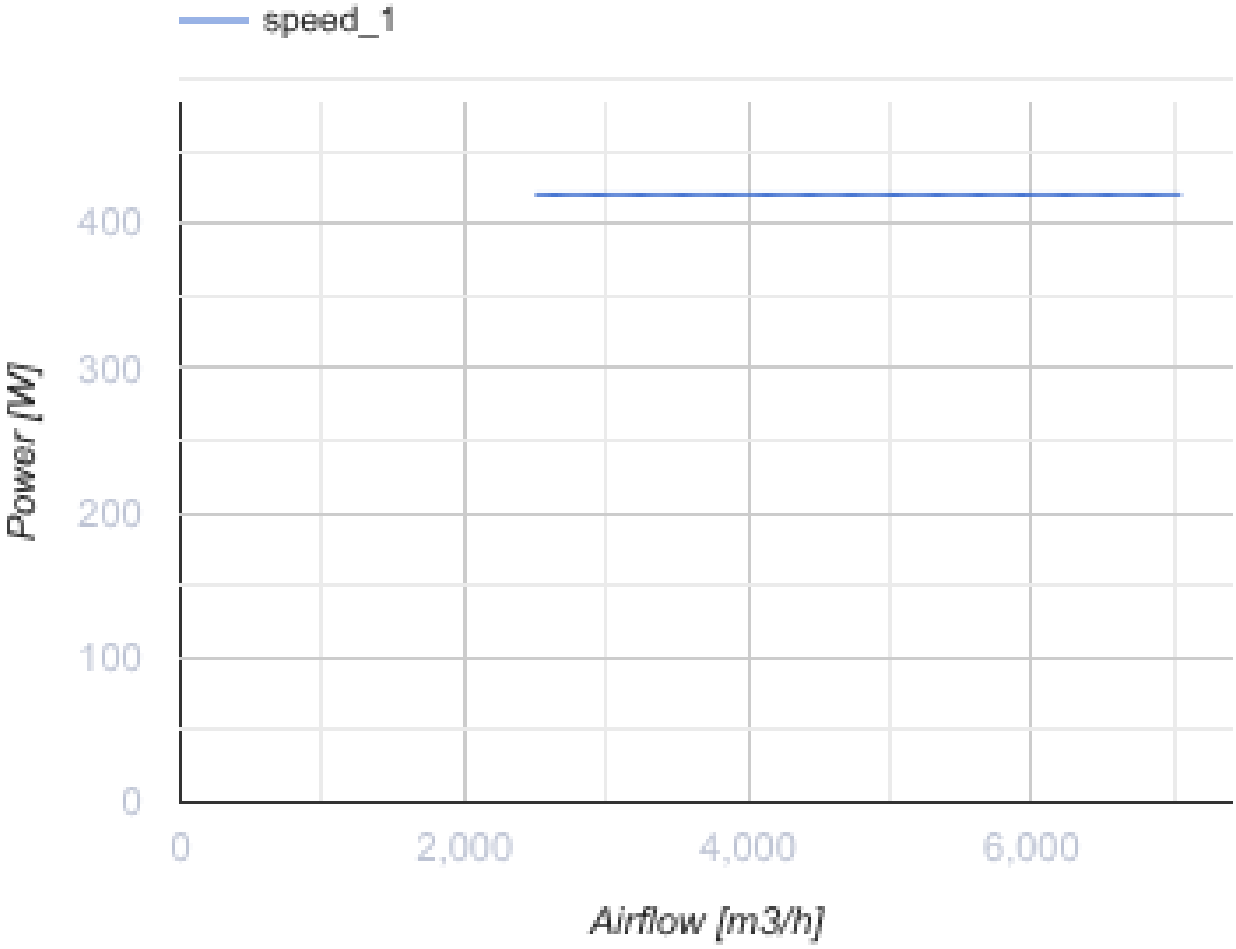

Dimensions

ØD	ØD1	ØD2	Ød	B	L
515	541	570	9,5	600	220

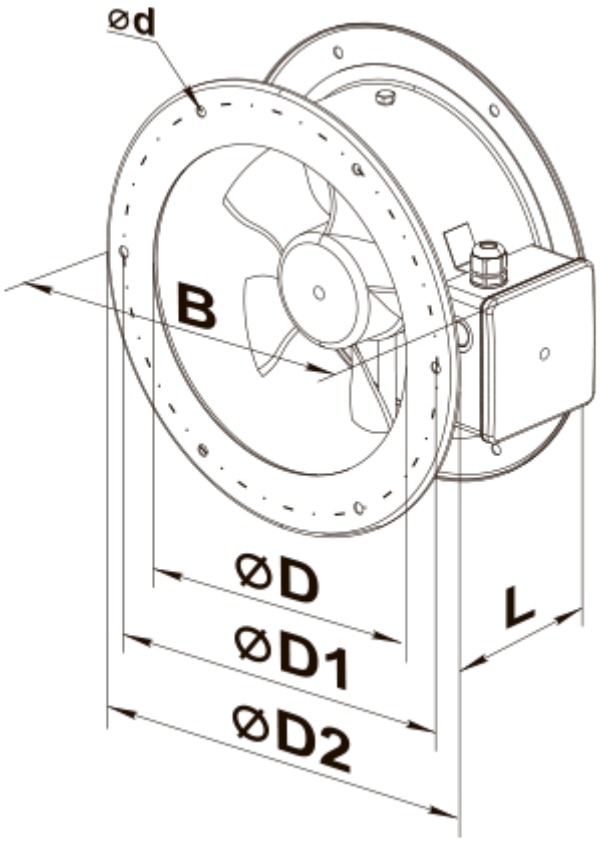
ød
B
øD
øD1
øD2
L

Ecodesign

Trademark	Vents
Model	VKF 6E 500
Type of drive installed	External MSD or VSD
Type of heat recovery system	None
Nominal external pressure (Pa)	100
Maximum external leakage rates (%)	2.7
Static efficiency (%)	32.1
Sound power level (dB(A))	89
Effective electric power input (kW)	0.44
Declared typology	NRVU UVU