VKF 6E 450 (220V/60Hz)



Inline axial fans

- Impeller type: Axial
- Casing material: Coated steel
- Installation in any position

	Unit of measurement	VKF 6E 450 (220V/60Hz)
Phases	-	1
Maximum supply voltage	V	240
Minimum supply voltage	V	220
Power supply frequency	Hz	60
Weight	kg	9.1
Transported air temperature (max)	°C	50
Transported air temperature (min)	°C	-30
Ingress protection rating	-	IPX4
Ingress protection rating of the drive	-	IP54
Impeller material	-	Coated steel

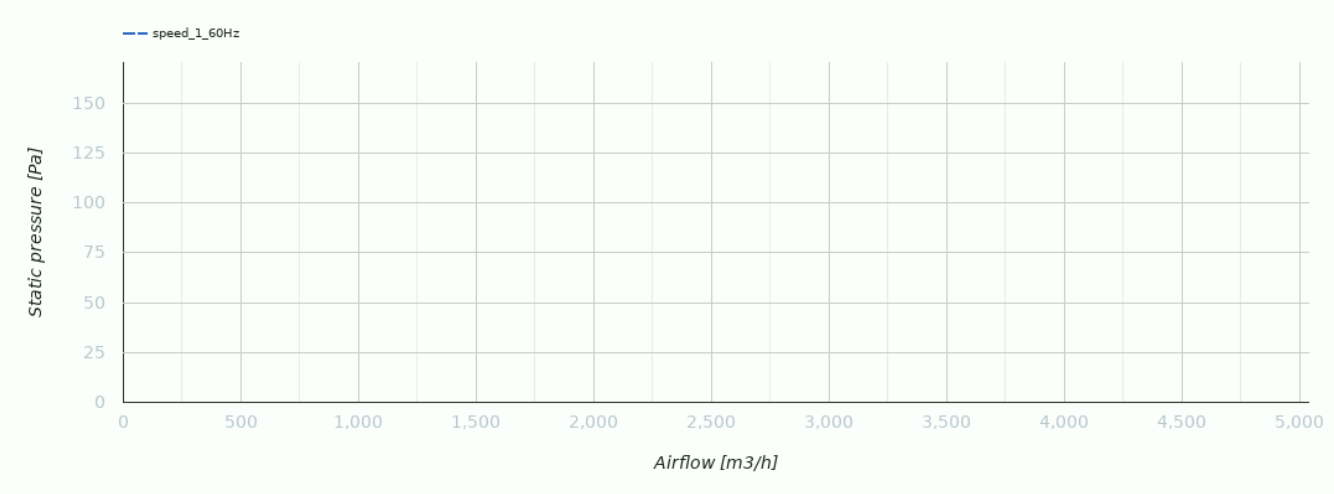
speed_1_60Hz
Static pressure [Pa]
150
125
100
75
50
25
0
0
500
1,000
1,500
2,000
2,500
3,000
3,500
4,000
4,500
5,000
Airflow [m3/h]

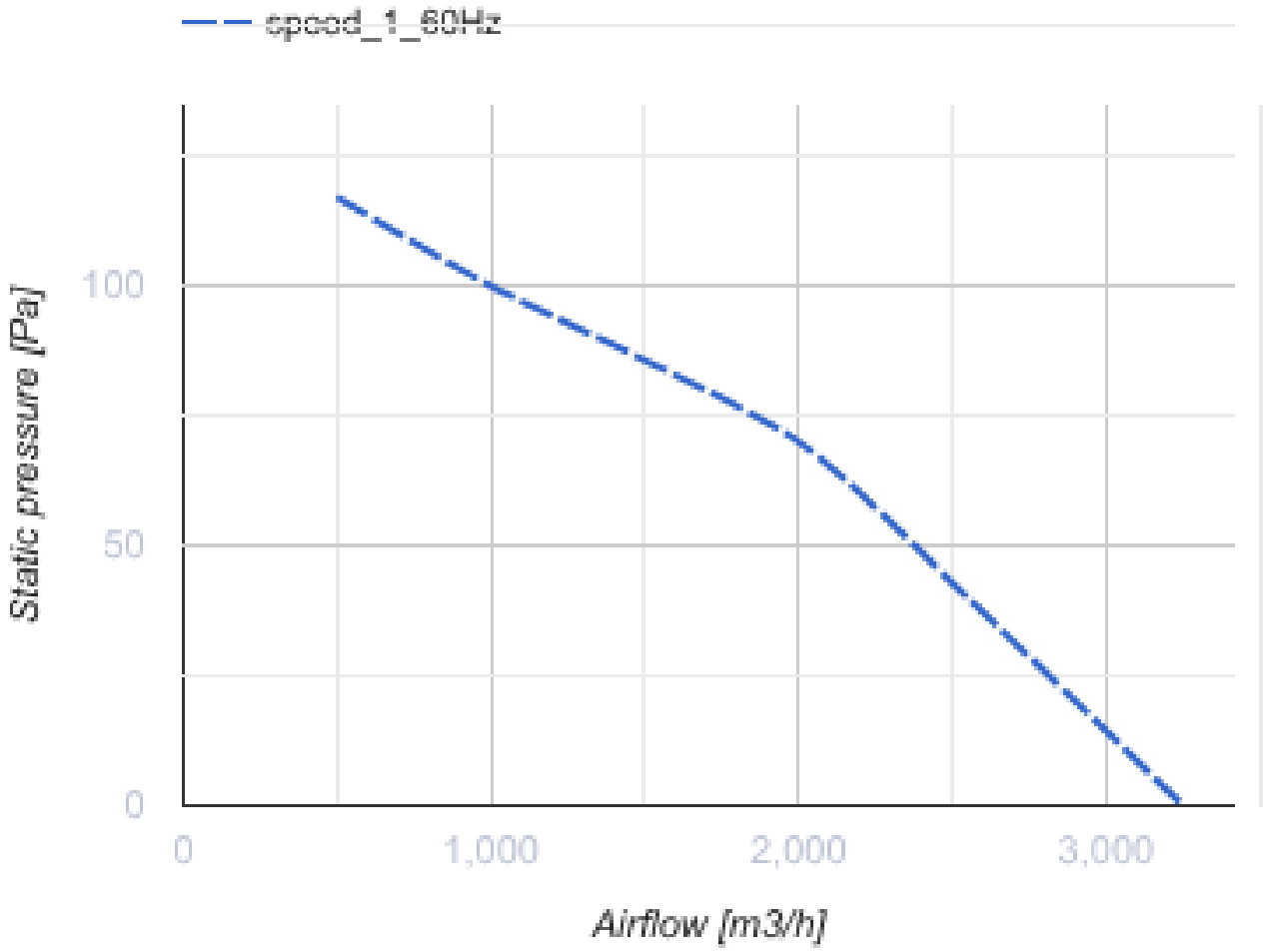
speed_1_60Hz
Static pressure [Pa]
100
50
0
0
1,000
2,000
3,000
Airflow [m3/h]

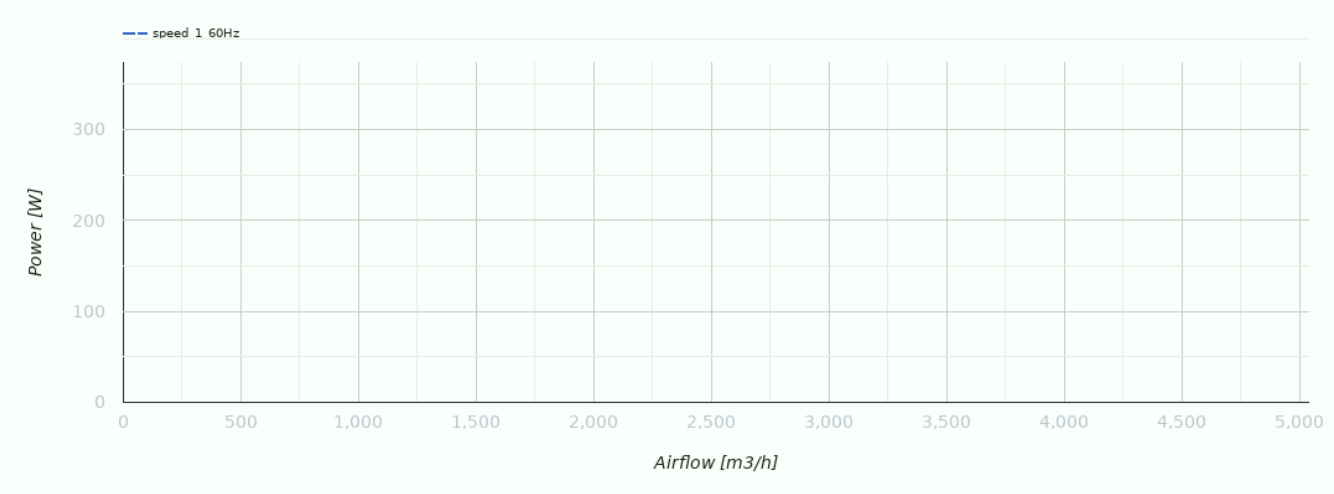

Dimensions

ØD	ØD1	ØD2	Ød	B	L
462	487	515	9,5	550	200

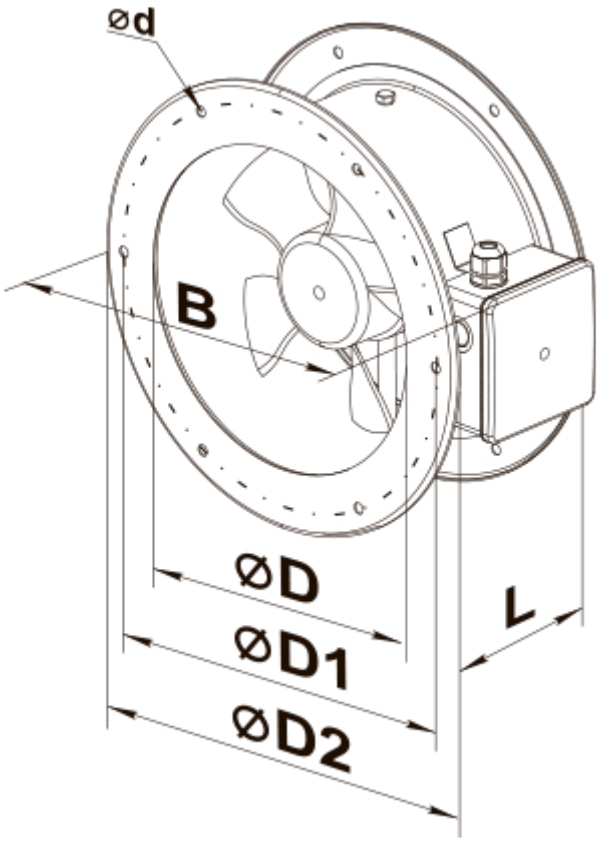

Ecodesign

Trademark	Vents
Model	VKF 6E 450 (220V/60Hz)
Type of drive installed	External MSD or VSD
Type of heat recovery system	None
Nominal external pressure (Pa)	90
Maximum external leakage rates (%)	2.7
Static efficiency (%)	32
Declared typology	NRVU UVU
Effective electric power input (kW)	0.288
Sound power level (dB(A))	84