VKF 6D 800



Inline axial fans

- Sound pressure level LpA at 3 m: 67
- Impeller type: Axial
- Casing material: Coated steel
- Installation in any position

	Unit of measurement	VKF 6D 800
Connected air duct size	mm	800
Phases	-	3
Minimum supply voltage	V	400
Maximum supply voltage	V	400
Power supply frequency	Hz	50
Rated power	W	1850
Unit current	A	3.7
Maximum airflow	m³/h	25000
Rotation speed at 50hz	-	915
Sound pressure level LpA at 3 m	dB(A)	67
Weight	kg	40
Transported air temperature (max)	°C	60
Transported air temperature (min)	°C	-30
Ingress protection rating	-	IPX4
Ingress protection rating of the drive	-	IP54
Impeller material	-	Coated steel

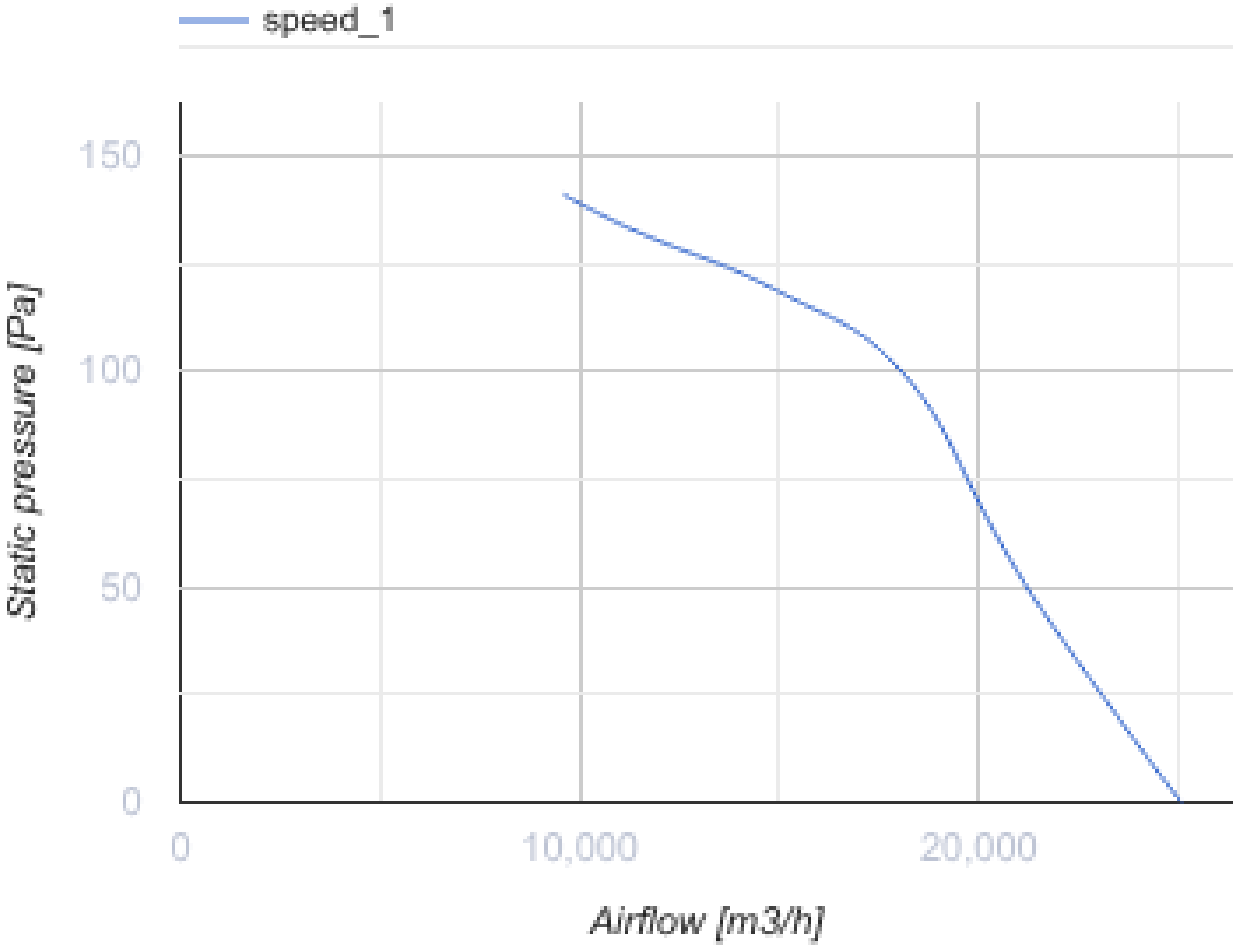
speed_1
150
100
50
0
Static pressure [Pa]
0
10,000
20,000
Airflow [m3/h]

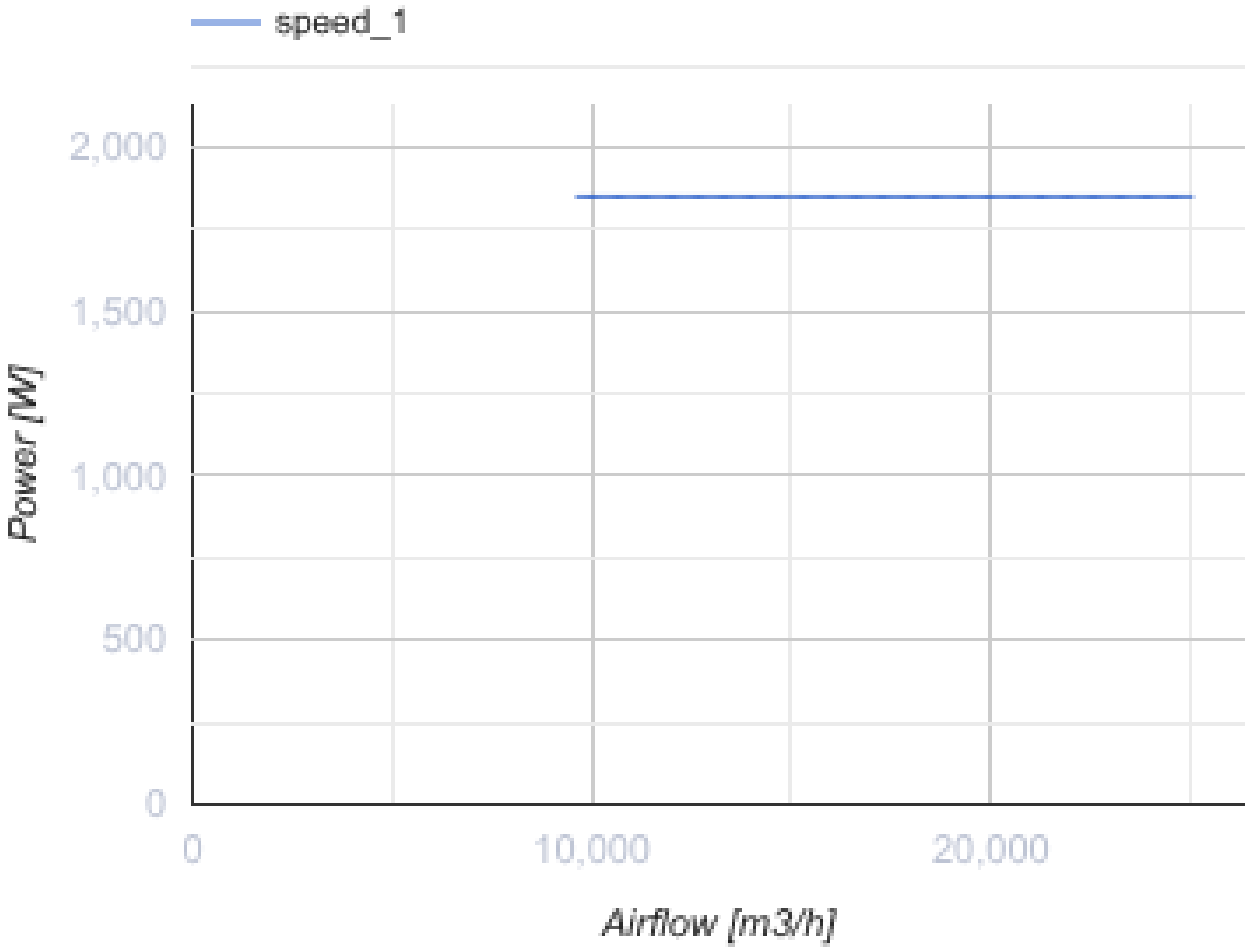

Dimensions

ØD	ØD1	ØD2	Ød	B	L
800	845	880	11.5	910	280

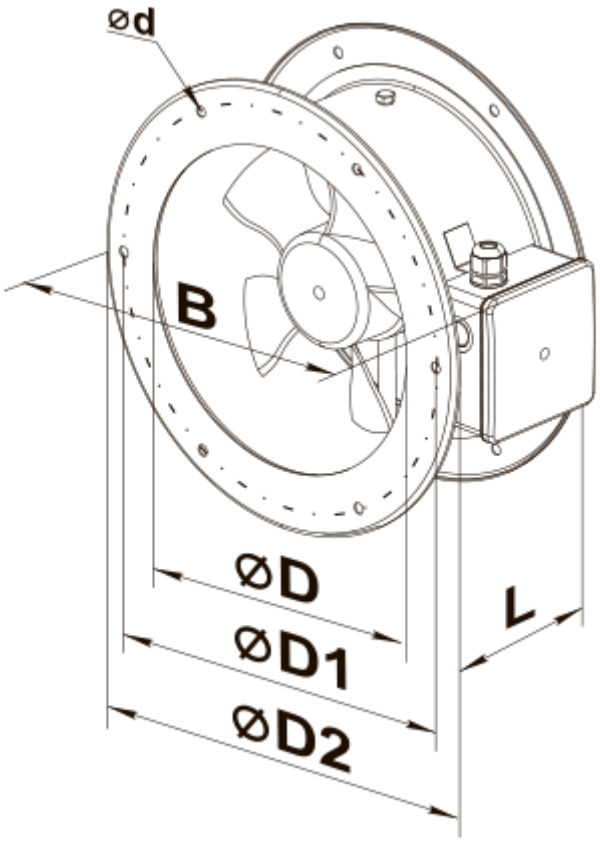
ød
B
øD
øD1
øD2
L