VKF 6D 550



Inline axial fans

- Sound pressure level LpA at 3 m: 61
- Impeller type: Axial
- Casing material: Coated steel
- Installation in any position

	Unit of measurement	VKF 6D 550
Phases	-	3
Maximum supply voltage	V	400
Minimum supply voltage	V	400
Power supply frequency	Hz	50
Rated power	W	337
Unit current	A	0.9
Maximum airflow	m³/h	6400
Sound pressure level LpA at 3 m	dB(A)	61
Weight	kg	13.9
Transported air temperature (max)	°C	60
Transported air temperature (min)	°C	-30
Ingress protection rating	-	IPX4
Ingress protection rating of the drive	-	IP54
Impeller material	-	Coated steel

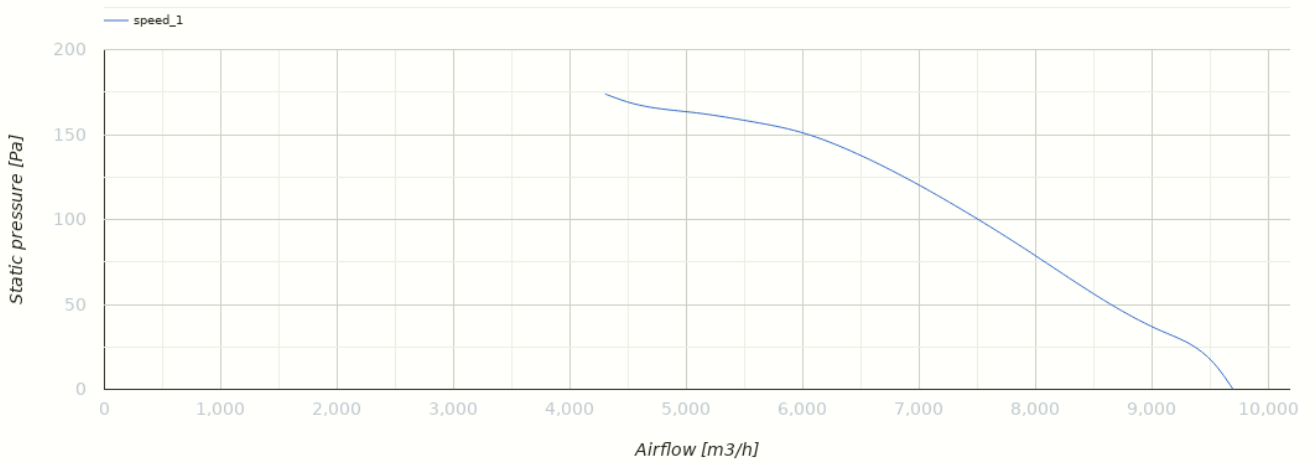

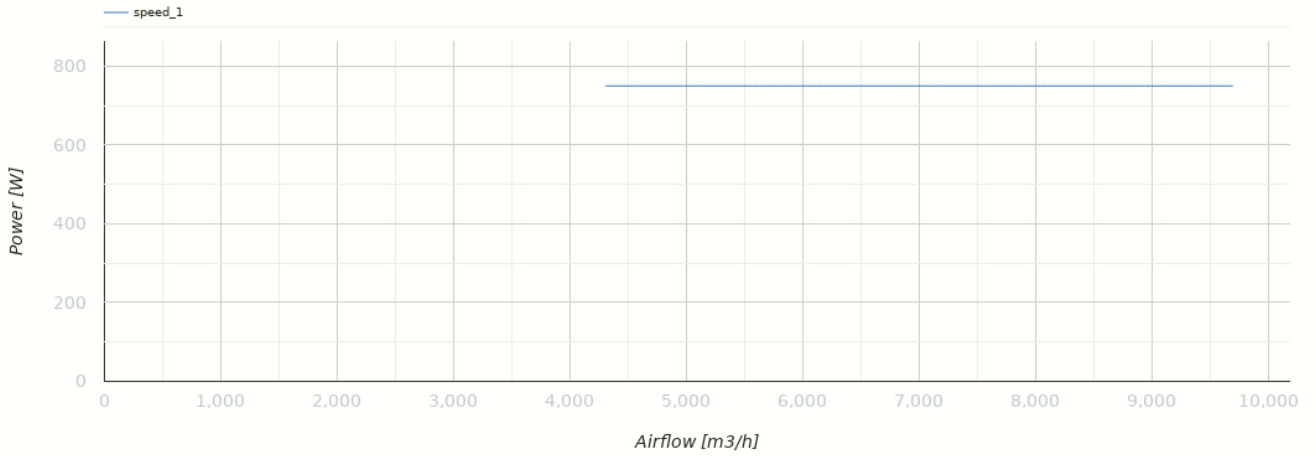

Dimensions

ØD	ØD1	ØD2	Ød	B	L
565	605	636	11,5	660	230

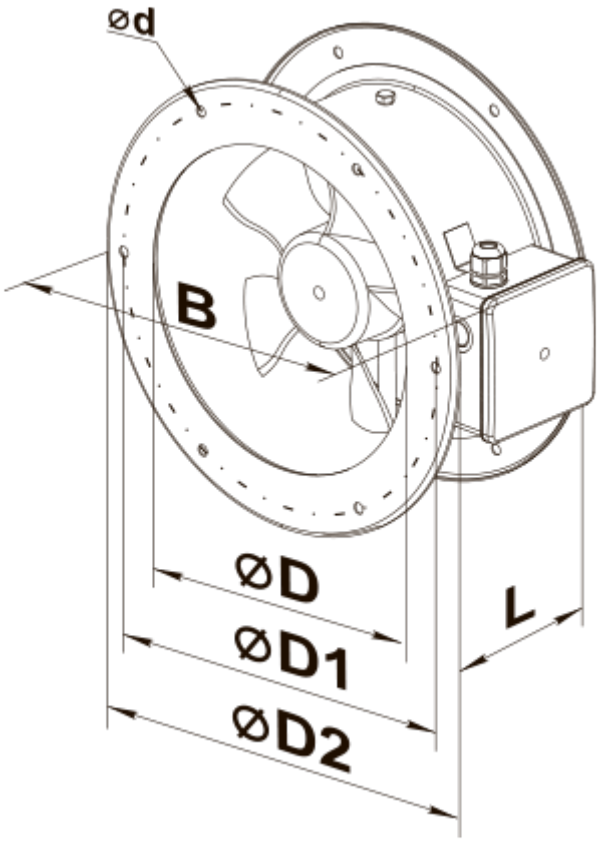
ød
B
øD
øD1
øD2
L