VKF 6D 550 (220V/60Hz)



Inline axial fans

- Impeller type: Axial
- Casing material: Coated steel
- Installation in any position

	Unit of measurement	VKF 6D 550 (220V/60Hz)
Phases	-	3
Maximum supply voltage	V	400
Minimum supply voltage	V	400
Power supply frequency	Hz	60
Weight	kg	13.9
Transported air temperature (max)	°C	50
Transported air temperature (min)	°C	-30
Ingress protection rating	-	IPX4
Ingress protection rating of the drive	-	IP54
Impeller material	-	Coated steel

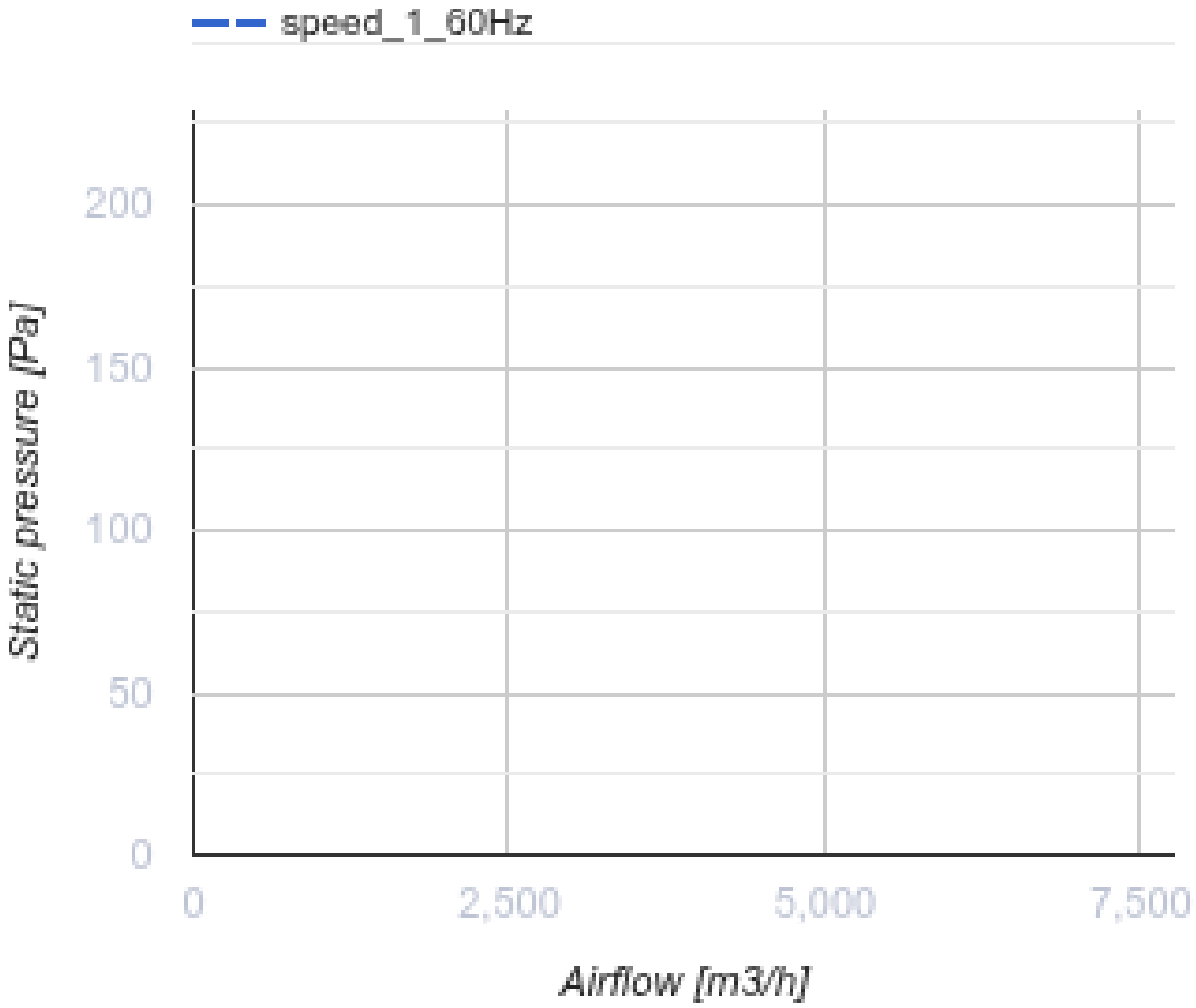
speed_1_60Hz
Static pressure [Pa]
200
150
100
50
0
0
2,500
5,000
7,500
Airflow [m3/h]

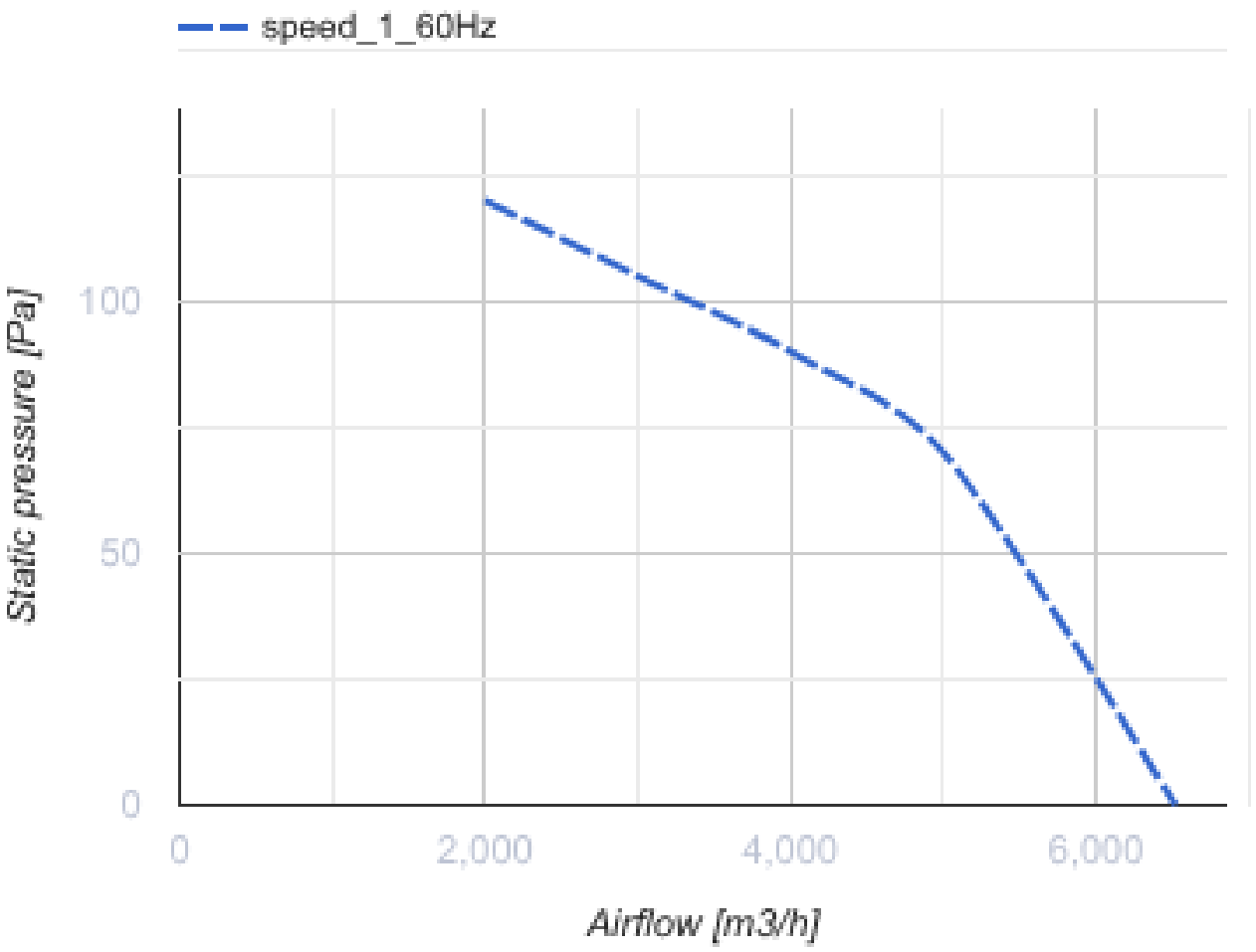
speed_1_60Hz
Static pressure [Pa]
100
50
0
0
2,000
4,000
6,000
Airflow [m3/h]

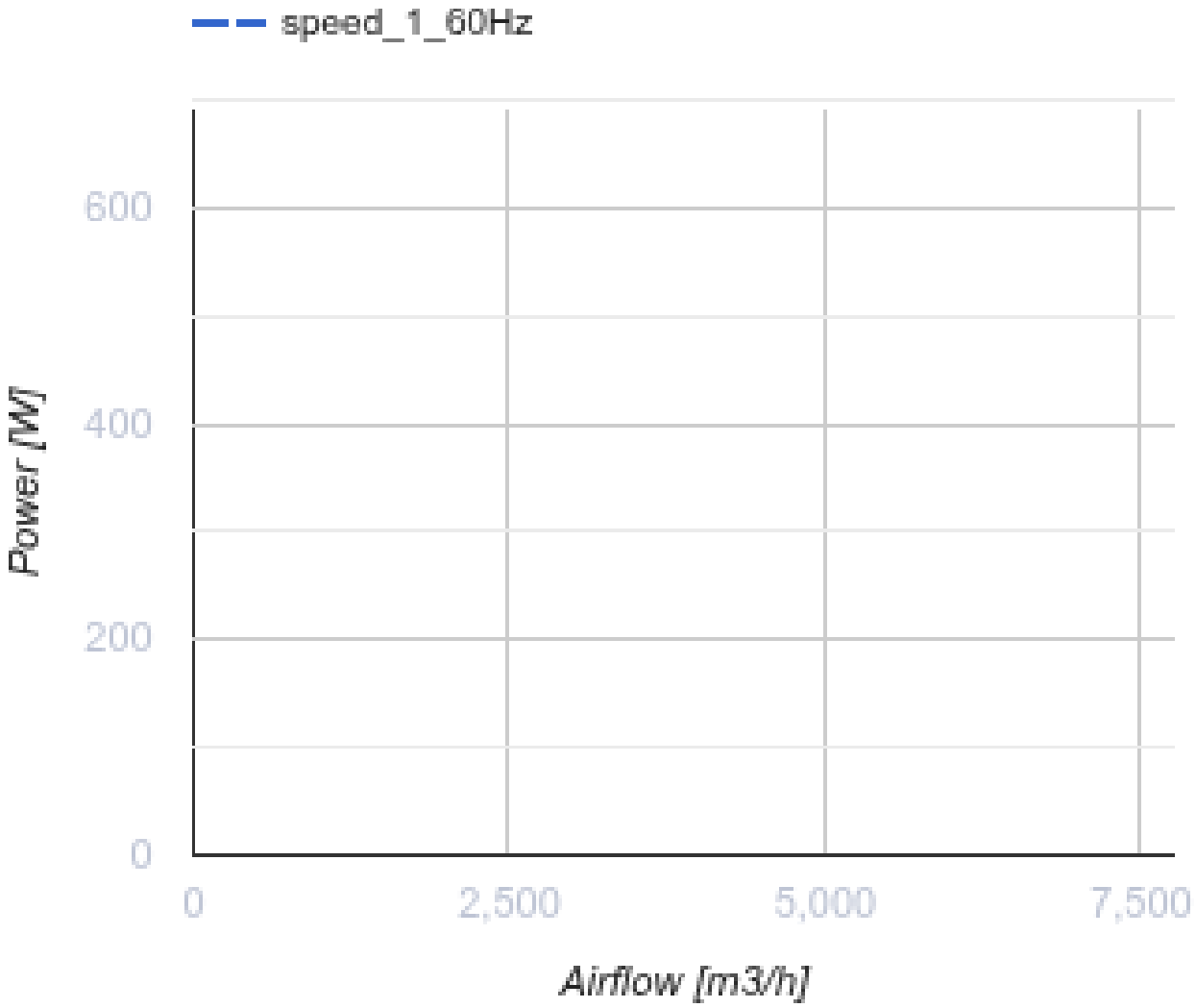

Dimensions

ØD	ØD1	ØD2	Ød	B	L
565	605	636	11,5	660	230

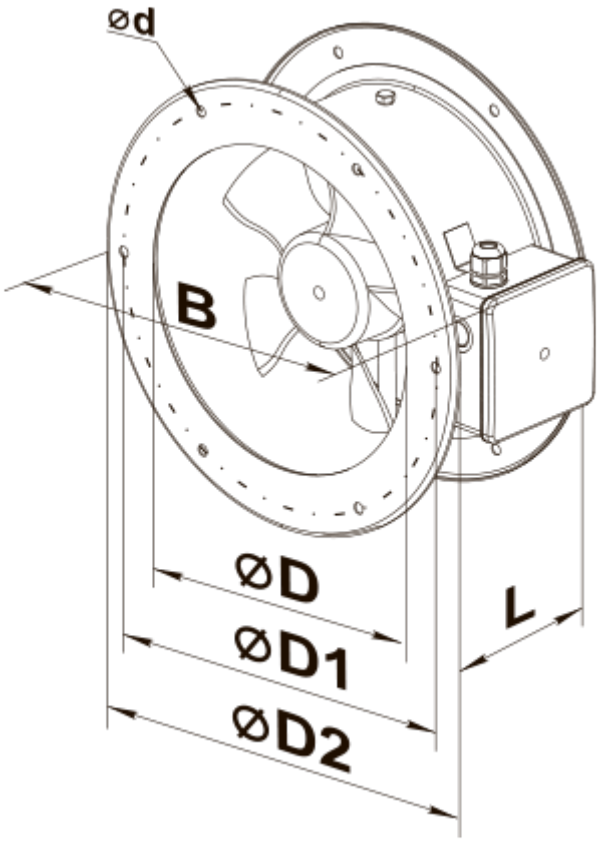
ød
B
øD
øD1
øD2
L