# VKF 6D 450



Inline axial fans

- Sound pressure level LpA at 3 m: 53
- Impeller type: Axial
- Casing material: Coated steel
- Installation in any position

| | Unit of measurement | VKF 6D 450 |
|---|---|---|
| Phases | - | 3 |
| Maximum supply voltage | V | 400 |
| Minimum supply voltage | V | 400 |
| Power supply frequency | Hz | 50 |
| Rated power | W | 148 |
| Unit current | A | 0.42 |
| Maximum airflow | m³/h | 3500 |
| Sound pressure level LpA at 3 m | dB(A) | 53 |
| Weight | kg | 9.1 |
| Transported air temperature (max) | °C | 60 |
| Transported air temperature (min) | °C | -30 |
| Ingress protection rating | - | IPX4 |
| Ingress protection rating of the drive | - | IP54 |
| Impeller material | - | Coated steel |

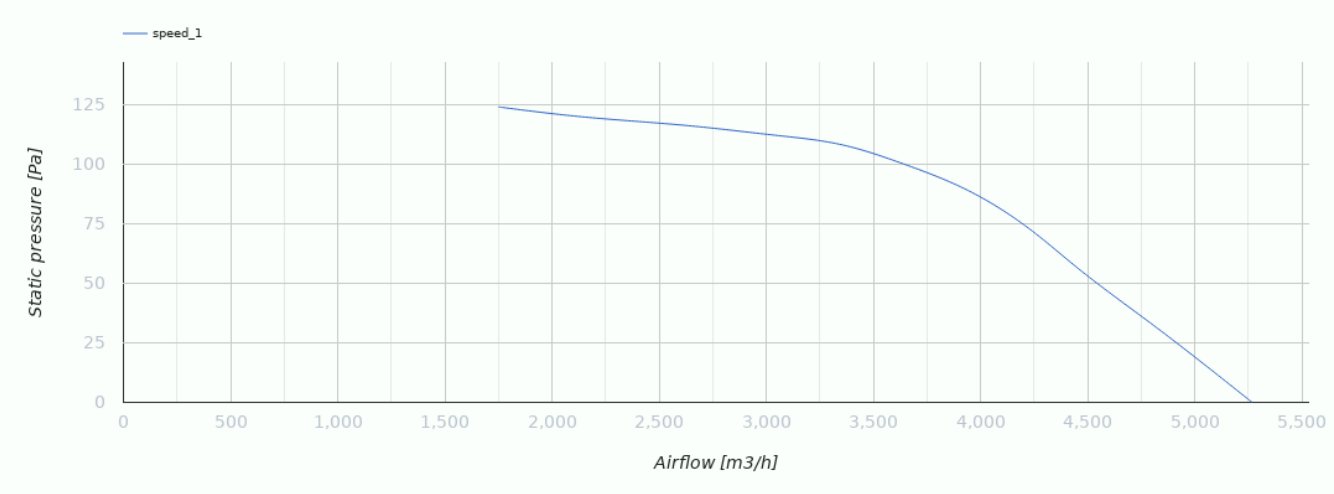
speed_1
Static pressure [Pa]
125
100
75
50
25
0
0
500
1,000
1,500
2,000
2,500
3,000
3,500
4,000
4,500
5,000
5,500
Airflow [m3/h]

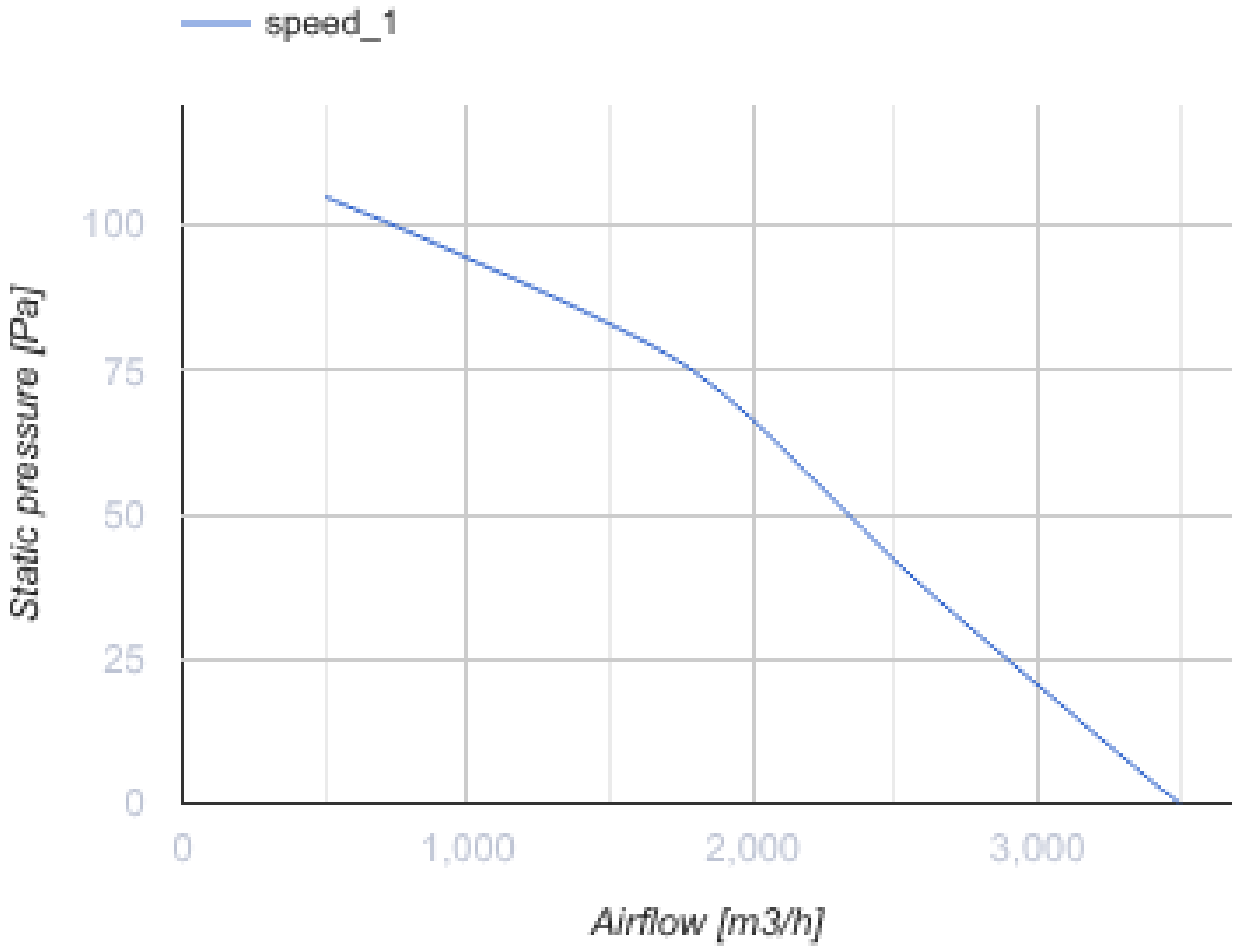
speed_1
Static pressure [Pa]
100
75
50
25
0
0
1,000
2,000
3,000
Airflow [m3/h]

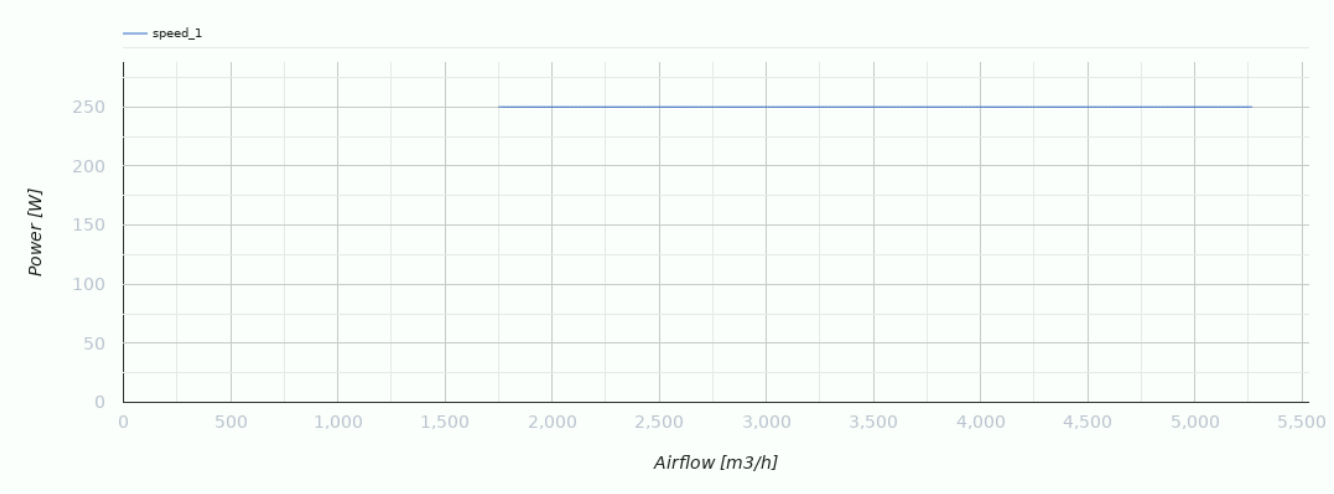


## Dimensions

| ØD | ØD1 | ØD2 | Ød | B | L |
|---|---|---|---|---|---|
| 462 | 487 | 515 | 9,5 | 550 | 200 |

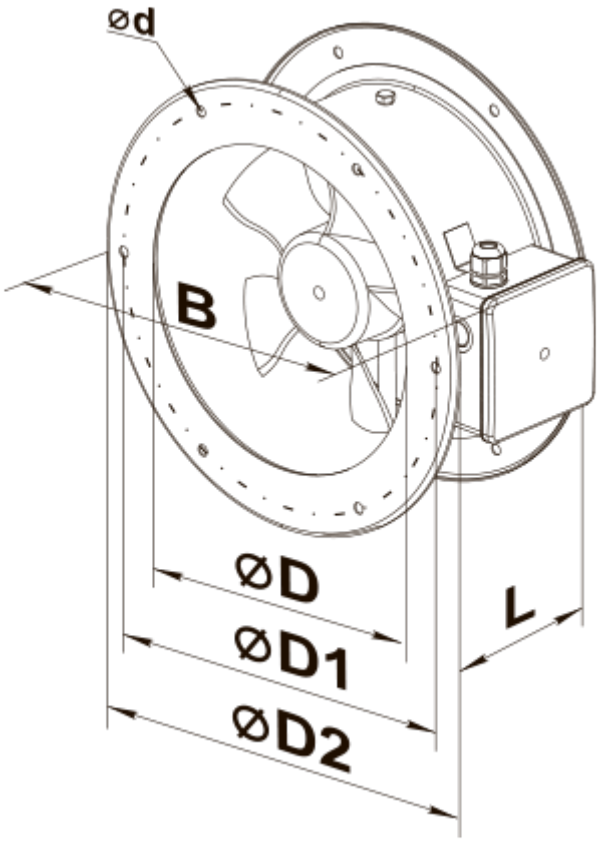

## Ecodesign

| Trademark | Vents |
|---|---|
| Model | VKF 6D 450 |
| Type of drive installed | External MSD or VSD |
| Type of heat recovery system | None |
| Nominal external pressure (Pa) | 100 |
| Maximum external leakage rates (%) | 2.7 |
| Static efficiency (%) | 35 |
| Sound power level (dB(A)) | 85 |
| Effective electric power input (kW) | 0.296 |
| Declared typology | NRVU UVU |