VKF 4D 550



Inline axial fans

- Sound pressure level LpA at 3 m: 64
- Impeller type: Axial
- Casing material: Coated steel
- Installation in any position

	Unit of measurement	VKF 4D 550
Connected air duct size	mm	550
Phases	-	3
Minimum supply voltage	V	400
Maximum supply voltage	V	400
Power supply frequency	Hz	50
Rated power	W	750
Unit current	A	1.5
Maximum airflow	m³/h	9700
Rotation speed at 50hz	-	1350
Sound pressure level LpA at 3 m	dB(A)	64
Weight	kg	13.9
Transported air temperature (max)	°C	60
Transported air temperature (min)	°C	-30
Ingress protection rating	-	IPX4
Ingress protection rating of the drive	-	IP54
Impeller material	-	Coated steel

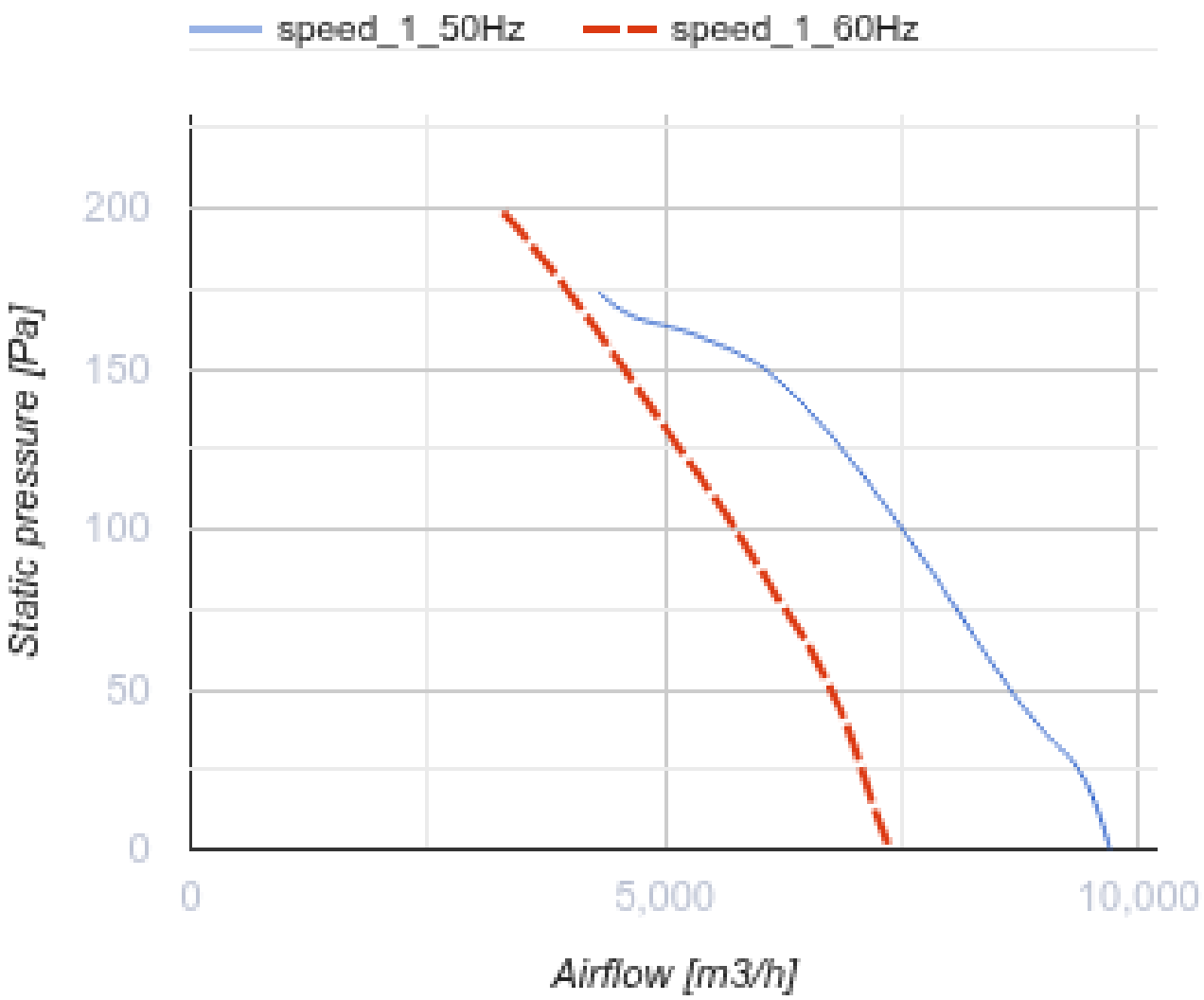
speed_1_50Hz
speed_1_60Hz
200
150
100
50
0
Static pressure [Pa]
0
5,000
10,000
Airflow [m3/h]

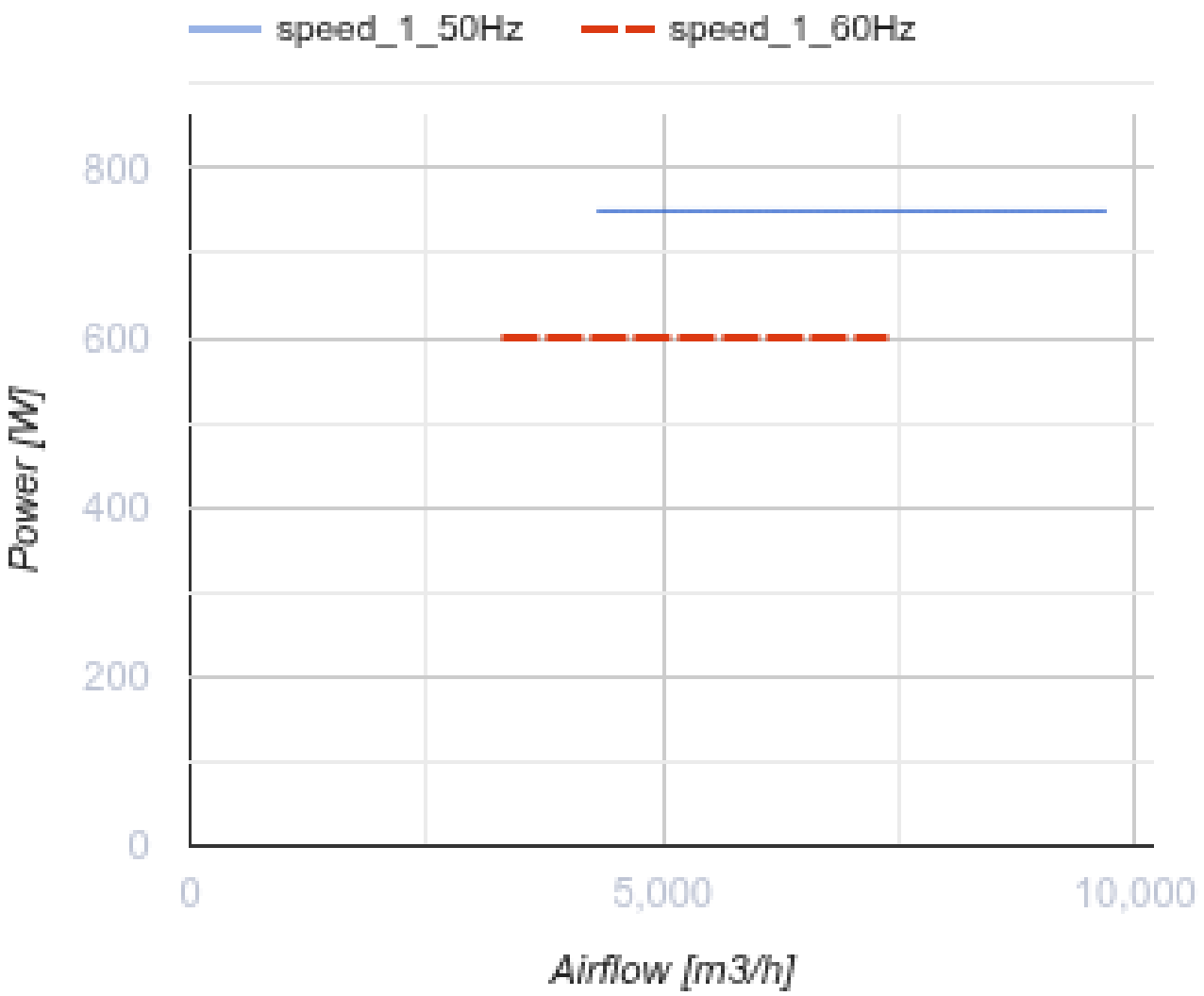

Dimensions

ØD	ØD1	ØD2	Ød	B	L
565	605	636	11.5	660	230

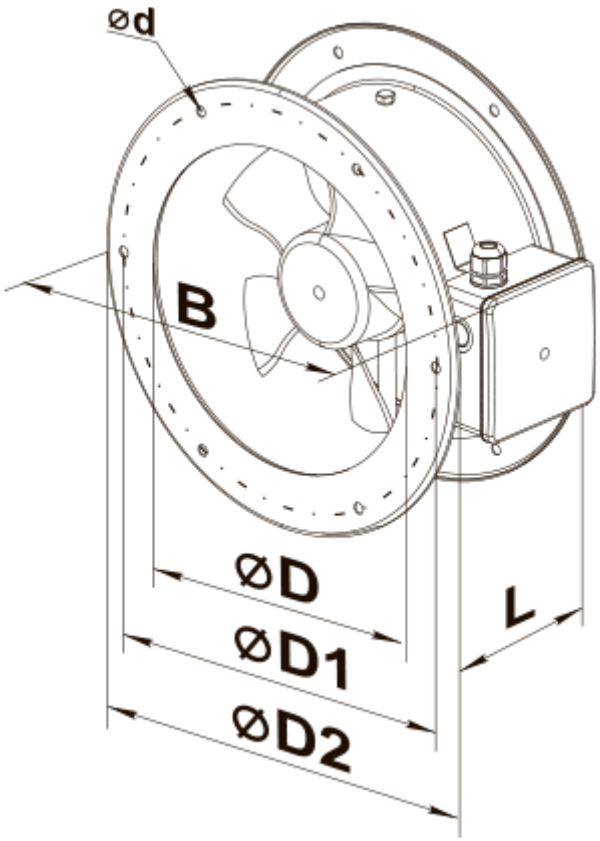
ød
B
øD
øD1
øD2
L