VKF 4D 350



Inline axial fans

- Sound pressure level LpA at 3 m: 46
- Impeller type: Axial
- Casing material: Coated steel
- Installation in any position

	Unit of measurement	VKF 4D 350	
Connected air duct size	mm	350	
Phases	-	3	
Minimum supply voltage	V	400	
Maximum supply voltage	V	400	
Power supply frequency	Hz	50	60
Rated power	W	140	
Unit current	A	0.38	
Maximum airflow	m³/h	2350	
Rotation speed at 50hz	-	1419	
Sound pressure level LpA at 3 m	dB(A)	46	
Weight	kg	7.7	
Transported air temperature (max)	°C	60	
Transported air temperature (min)	°C	-30	
Ingress protection rating	-	IPX4	
Ingress protection rating of the drive	-	IP54	
Impeller material	-	Coated steel	

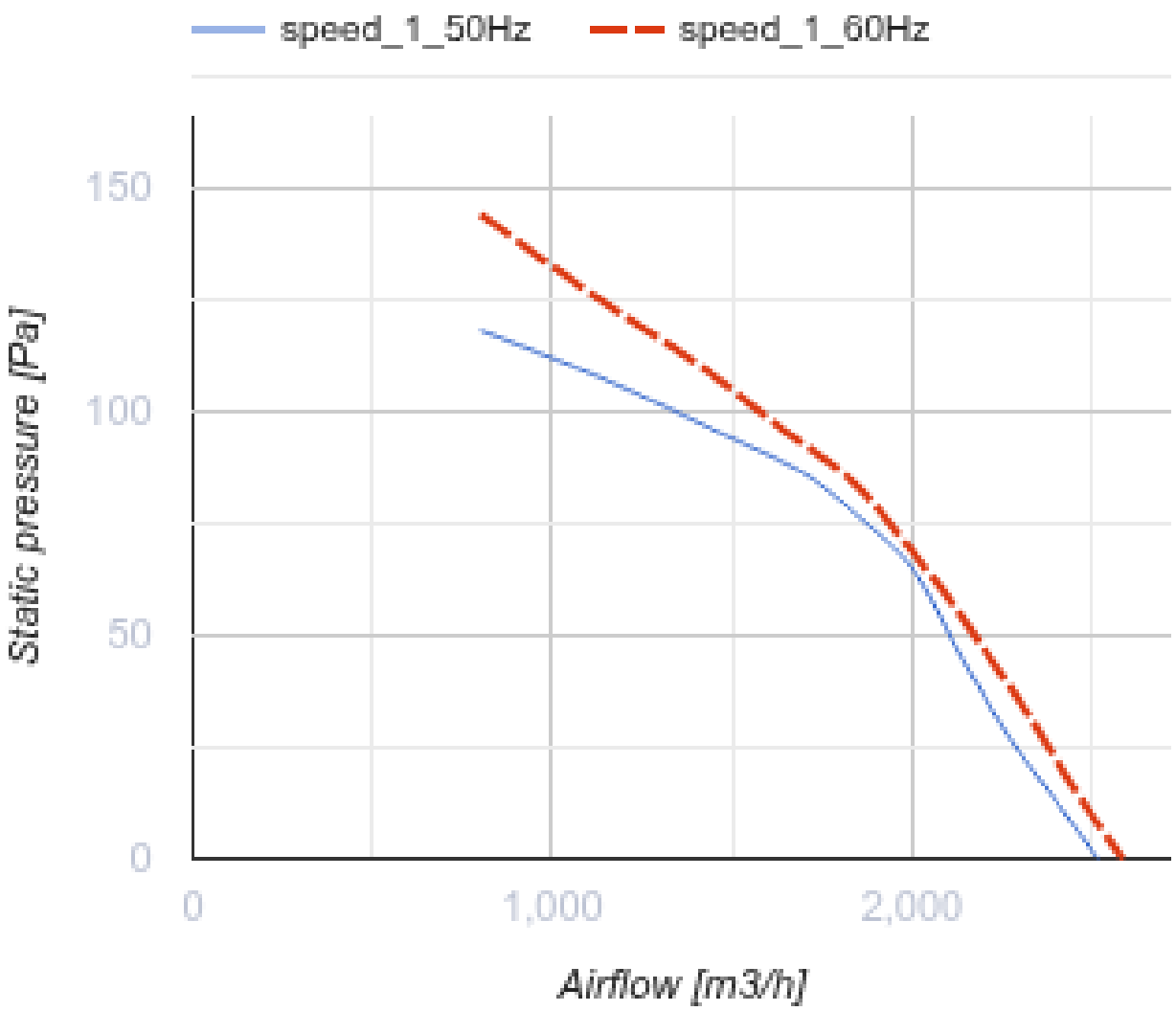
speed_1_50Hz
speed_1_60Hz
150
100
50
0
Static pressure [Pa]
0
1,000
2,000
Airflow [m3/h]

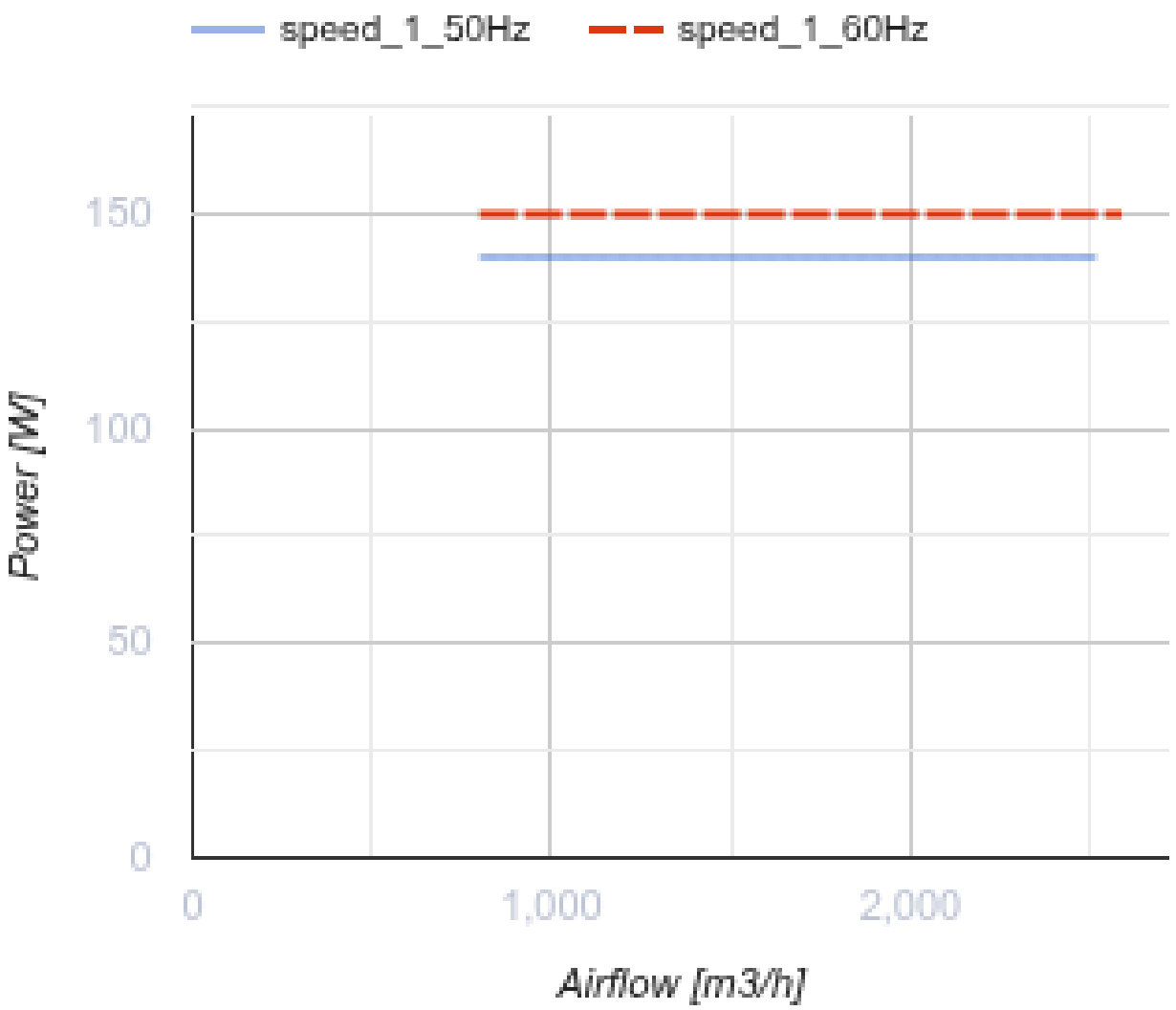

Dimensions

ØD	ØD1	ØD2	Ød	B	L
362	395	421	9.5	450	160

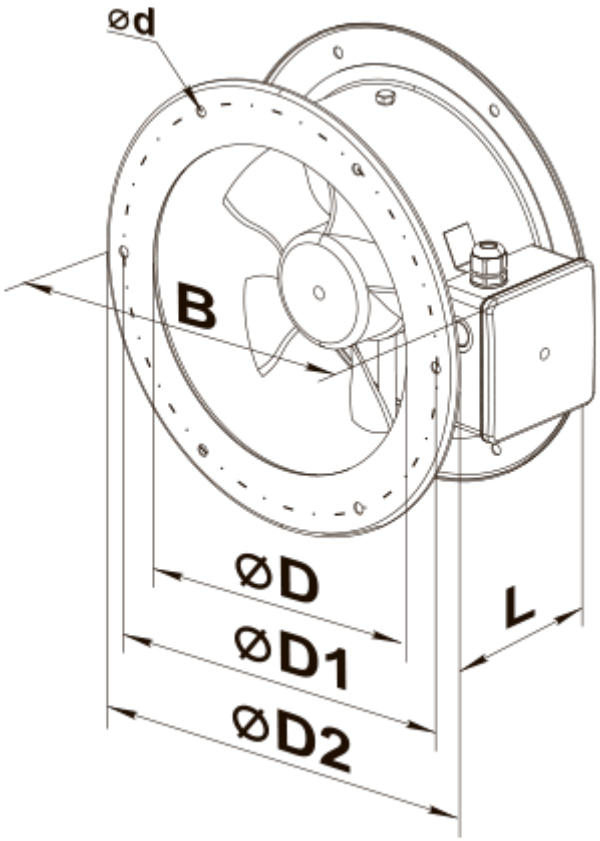
ød
B
øD
øD1
øD2
L

Ecodesign

Trademark	Vents
Model	VKF 4D 350
Type of drive installed	External MSD or VSD
Type of heat recovery system	None
Nominal external pressure (Pa)	80
Maximum external leakage rates (%)	2.7
Static efficiency (%)	31.7
Declared typology	NRVU UVU
Effective electric power input (kW)	0.129
Sound power level (dB(A))	82