# VKF 2D 300



Inline axial fans

- Sound pressure level LpA at 3 m: 52
- Impeller type: Axial
- Casing material: Coated steel
- Installation in any position

| | Unit of measurement | VKF 2D 300 | |
|---|---|---|---|
| Connected air duct size | mm | 300 | |
| Phases | - | 3 | |
| Maximum supply voltage | V | 400 | |
| Minimum supply voltage | V | 400 | |
| Power supply frequency | Hz | 50 | 60 |
| Rated power | W | 145 | |
| Unit current | A | 0.25 | |
| Maximum airflow | m³/h | 2310 | |
| Rotation speed at 50hz | - | 2350 | |
| Sound pressure level LpA at 3 m | dB(A) | 52 | |
| Weight | kg | 5.7 | |
| Transported air temperature (max) | °C | 60 | |
| Transported air temperature (min) | °C | -30 | |
| Ingress protection rating | - | IPX4 | |
| Ingress protection rating of the drive | - | IP54 | |
| Impeller material | - | Coated steel | |

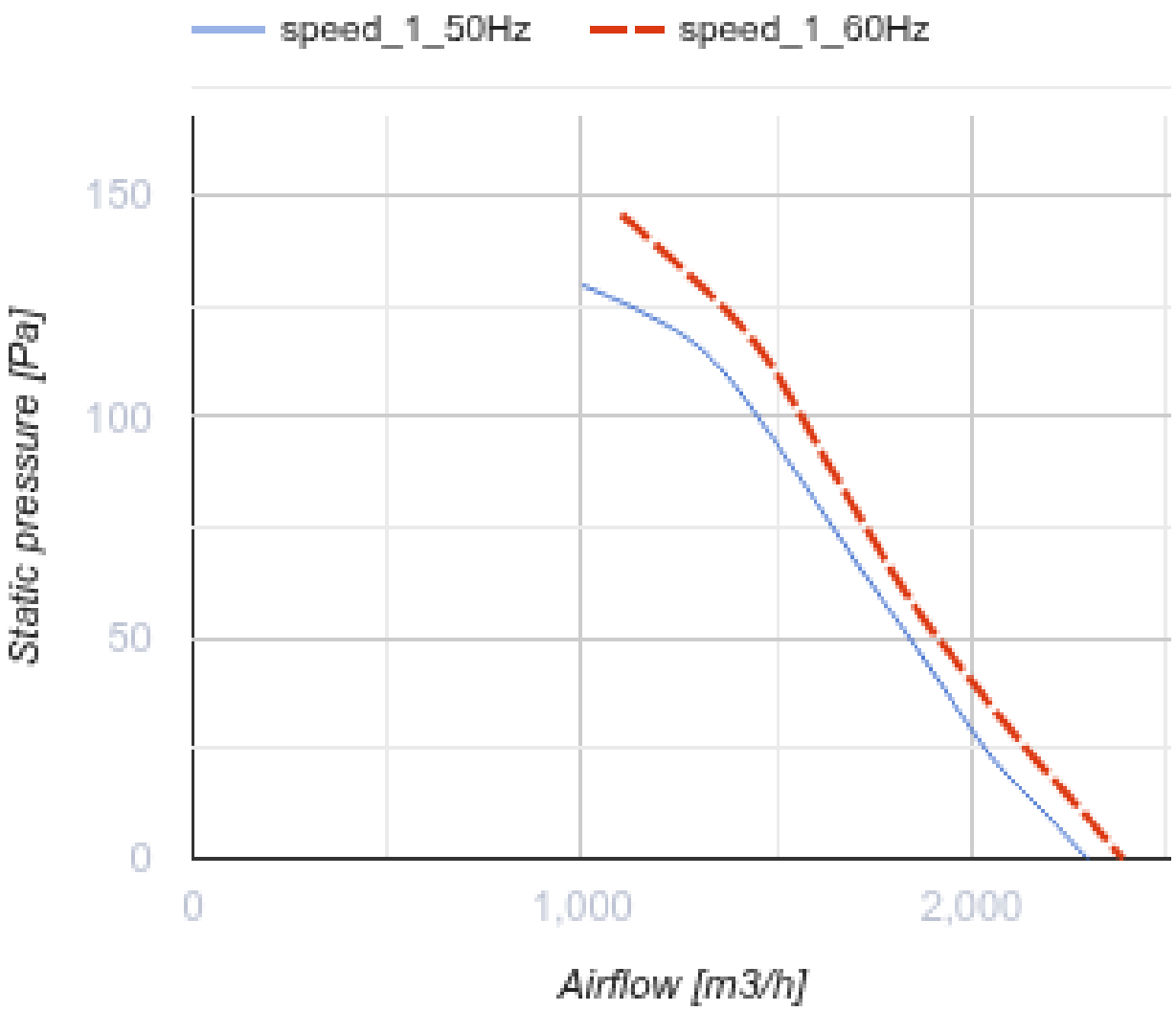
speed_1_50Hz
speed_1_60Hz
150
100
50
0
Static pressure [Pa]
0
1,000
2,000
Airflow [m3/h]

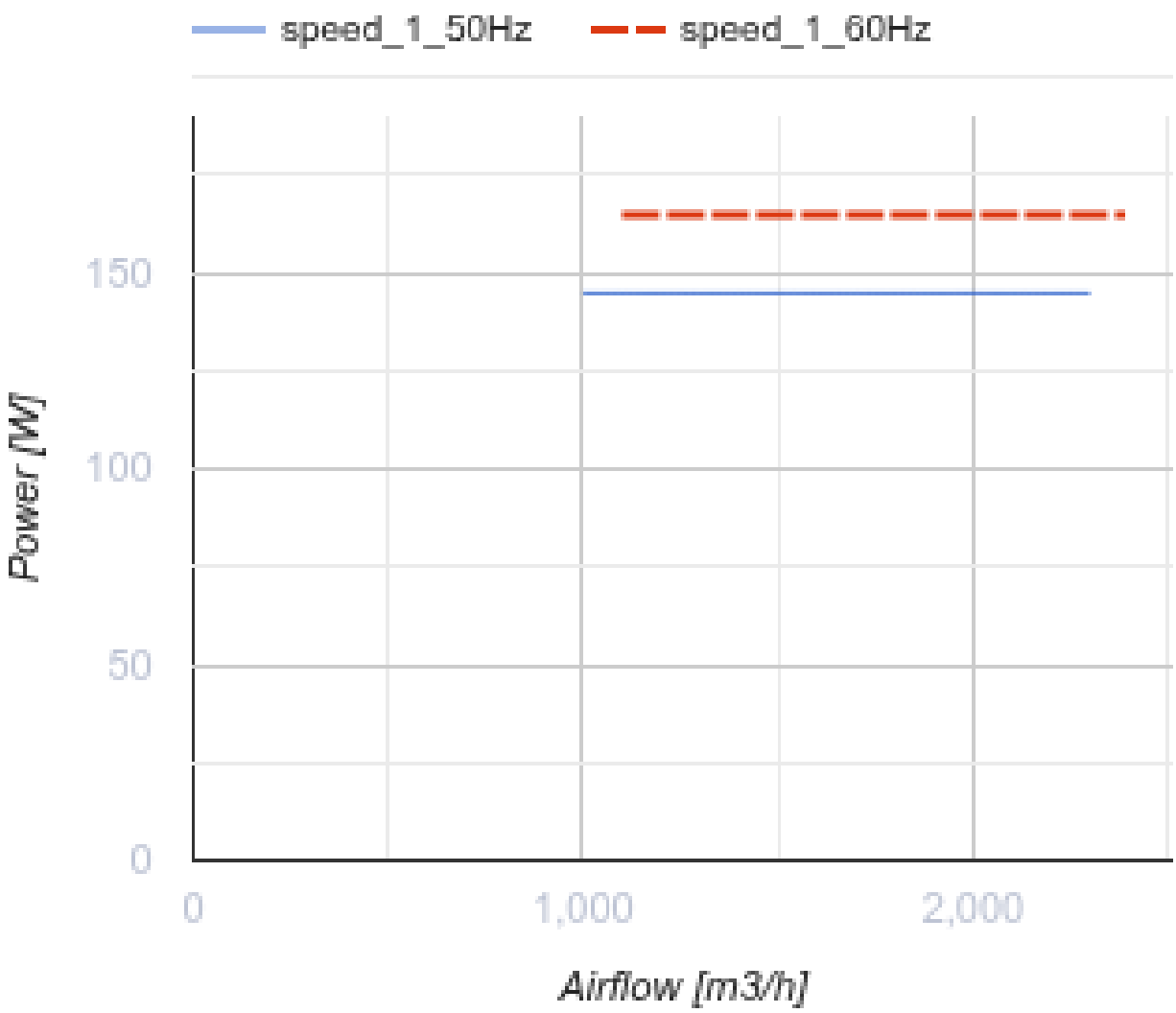


## Dimensions

| ØD | ØD1 | ØD2 | Ød | B | L |
|---|---|---|---|---|---|
| 310 | 356 | 382 | 7 | 410 | 160 |

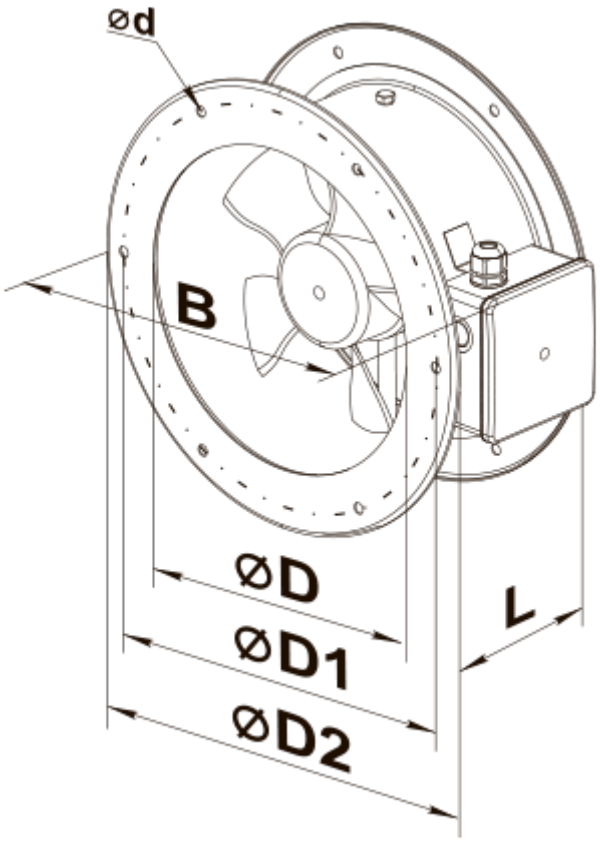
ød
B
øD
øD1
øD2
L

## Ecodesign

| Trademark | Vents |
|---|---|
| Model | VKF 2D 300 |
| Type of drive installed | External MSD or VSD |
| Type of heat recovery system | None |
| Nominal external pressure (Pa) | 110 |
| Maximum external leakage rates (%) | 2.7 |
| Static efficiency (%) | 30.2 |
| Effective electric power input (kW) | 0.141 |
| Sound power level (dB(A)) | 80 |
| Declared typology | NRVU UVU |